LJ6100

A3激光打印机

A3 LASER PRINTER

用户手册

User’s Guide

lenovo

Statement

Welcome to Lenovo products.

Please read carefully all the materials accompanying the machine before installing and using this product for the first time. It will help you make better use of the product. If you fail to operate the product in accordance with the instructions and requirements provided in this manual or mishandle the product due to misunderstanding or other causes, Lenovo (Beijing) Limited shall not be responsible for any losses arising out thereof, except for the loss resulting from improper installation or caused during the process of operation by professional maintenance personnel from Lenovo.

Lenovo (Beijing) Limited has conducted a strict and careful collation of the manual. However, we cannot guarantee that the manual is completely free of any error or omission.

Lenovo (Beijing) Limited is committed to continuously improve product usage and service quality. Accordingly, it reserves the right to make changes to any product or software program described in the manual and information contained herein without prior notice.

The manual is intended to help you use Lenovo products in a correct way, which does not represent any description of software or hardware configuration for the product. In relation to product configuration, please refer to relevant contract (if any) and packing list or consult with the distributor who delivered the product to you. Pictures contained in the manual are for reference only. In case of inconsistency between particular pictures and actual display of the product, please follow the actual display of the product.

© 2009 Lenovo (Beijing) Limited. This manual is protected by copyright laws and regulations. Without prior written authorization from Lenovo (Beijing) Limited, you shall not reproduce or copy the manual in any way, or transmit the manual via any wireline or wireless network in any form, or translate the manual into any language.

Lenovo is either registered trademarks or trademarks of Lenovo (Beijing) Limited. Other names and products mentioned herein may be the registered trademarks or trademarks of Lenovo or other companies.

If you find any inconsistency between product reality and this manual during the operational process or would like to obtain the latest information or have any problems or suggestions, please contact or log onto:

Technical Consulting TEL: 4008101234
SUNSHINE service website: http://www.lenovo.com

Preface

Thank you for choosing Lenovo LJ6100 laser printer.

This manual contains important information regarding printer operation and precautions that must be adhered to. To help you use your new printer efficiently and effectively, please read this manual before use.

Further, after you have read the manual, store it in a safe place. It will be useful in case you forget how to perform operations.

In this manual, safety instructions are marked with the symbol ⚠. Always read these before performing procedures and make sure you follow them.

This is a class I laser product, and does not emit dangerous laser radiation. This equipment should be operated in accordance with this manual in order to avoid injury or damage.

This is a class B information processing device and complies with Voluntary Control Council for Interference by Information Technology Equipment (VCCI) standards. This device is designed for domestic use, however it may cause radio interference when placed near a radio, television, or other type of receiver. Please follow the instructions in this manual closely.

Table of Contents

Preface ii
Table of Contents iii
How to Use this Manual vi
Safety Precautions viii

1 Installing the Printer 1-1

1.1 Checking the Package Contents, Unpacking the Printer 1-2
1.2 Installing the EP Cartridge 1-4
1.3 Connecting the Parallel or USB cables 1-7
1.4 Connecting the Power Cord to Switch On Printer 1-8
1.5 Loading Paper 1-9
1.6 Installing the Printer Driver 1-12
1.6.1 Installing the Driver 1-12
1.6.2 Installing the Printer Driver for Parallel 1-12
1.6.3 Installing the Printer Driver for USB 1-15

2 Maintenance 2-1

2.1 Paper Specifications 2-2
2.1.1 Usable Paper 2-2
2.1.2 Unsuitable Paper 2-5
2.1.3 Storing Paper 2-6
2.2 Loading Paper 2-7
2.2.1 Follow the procedure below to load plain paper into the Main Tray. 2-7
2.2.2 Setting the various types of paper on the Manual Feed Tray 2-10
2.2.3 Precautions for Loading Paper to the Paper Tray 2-12
2.3 Cleaning 2-15
2.3.1 Cleaning the Rib Plate 2-15
2.3.2 Cleaning the Exterior of the Printer 2-18
2.3.3 Cleaning the Inside of the Printer 2-19

3 Troubleshooting 3-1

3.1 Trouble Types 3-2
3.2 Power does not come on 3-3

3.3 Unable to Print....3-4
3.4 Print Quality Problems....3-6
3.4.1 All Blank or All Black Output....3-6
3.4.2 Faded, Dirty, Uneven, Wrinkled or Smudged Output....3-7
3.4.3 Output is Not Clear....3-10
3.5 Other Problems....3-11
3.6 State of the LED Indicator....3-12

4 Clearing Paper Jams....4-1
4.1 When Paper is Jammed....4-2
4.1.1 Paper Jam at Fusing Unit....4-3
4.1.2 Paper Jam in the Paper Tray....4-5
4.2 Unable to Feed Paper Properly....4-6
4.2.1 Unable to Feed Paper from the Paper Tray....4-6
4.2.2 If Paper Jams Frequently....4-7

5 Consumables....5-1
5.1 Introducing Consumables....5-2
5.2 EP Cartridge....5-3
5.2.1 Precautions on Handling the EP Cartridge....5-3
5.2.2 Replace the EP Cartridge....5-5

6 Software Supplied with LJ6100....6-1
6.1 Overview....6-2
6.1.1 Contents of Supplied CD-ROM....6-2
6.1.2 Applicable Operating Systems....6-2
6.1.3 Supported Hardware Interfaces PnP Standards....6-2
6.1.4 Driver Upgrade....6-3
6.2 Installing and Uninstalling LJ6100 Driver....6-4
6.2.1 Driver Installation Methods....6-4
6.2.2 Computer Configuration Requirement....6-4
6.2.3 Installing the Driver for Parallel....6-5
6.2.4 Installing the Driver for USB....6-5
6.2.5 Driver Uninstallation....6-5
6.3 Drivers....6-6
6.3.1 Driver Interface....6-6
6.3.2 Setting Driver....6-7
6.4 Status Monitor Program....6-14
6.4.1 Status Monitor Interface....6-14

A Appendixes A-1
A.1 General Specifications A-2
Printable Area.....A-3
A.2 Life Span of Consumables A-4
A.3 Contact Us.....A-5

How to Use this Manual

Manual Overview

This section is a brief introduction to the manual.
The sections of this manual are classed according to the following conventions:

○ : Read before use
☆ : Read when necessary

Chapter Title	Main Contents	Purpose
Safety Precautions	This section describes precautions for the safe use and preservation of the printer.In order to avoid serious injury or accident, all users should read this chapter.	○
Chapter 1 Installing the Printer	This chapter describes how to select an appropriate installation location, what accessories are provided with the printer, and the installation procedures required once you have chosen a location for your printer.	○
Chapter 2 Maintenance	This chapter explains any necessary maintenance procedures, such as feeding paper, cleaning, and other procedures required for normal operation.	☆
Chapter 3 Troubleshooting	This chapter describes solutions to any problems that might occur when using the printer. Read this chapter to determine the nature of the problem and the best method of dealing with it.	☆
Chapter 4 Correcting a Paper Jam	This chapter explains procedures for dealing with paper jams.	☆
Chapter 5 Consumables	This chapter provides information about the expendables used with the printer, and also describes handling and replacement procedures.	☆
Chapter 6 Software Supplied with LJ6100	This chapter describes how to set the printer through the software supplied with LJ6100.	○
Appendixes	Specifications for the printer are listed here.	☆

Conventions

The following symbols are used in this manual:

⚠ **WARNING** **Warnings alert you to operations that could cause death or serious injury to yourself.**

NOTE **Cautions alert you to operations that could cause bodily injury or material damage.**

⚠ **CAUTION** *Important items alert you to items where you should follow the correct operating procedure. Make sure you read these items.*

NOTE *Notes provide you with useful information.*

SEE *Reference items indicate related information that may be useful to you.*

Safety Precautions

To ensure safe operation of your printer, make sure you read this section thoroughly before use.

Conventions and Symbols

Warning Is used to alert operators to an operating procedure, practice or condition that, if not strictly observed, can result in severe injury or loss of life.

Warning Is used to alert operators to an operating procedure, practice, or condition that, if not strictly observed, might result in safety hazards to personnel or damage to the equipment.

This symbol is used to alert operators to a specific operating procedure that requires close attention. Read and follow instructions carefully to ensure the task is accomplished safely.

This symbol is used to alert operators to a specific operating procedure that must not be performed. Read and follow instructions carefully to ensure the task is accomplished safely.

This symbol is used to alert operators to a specific operating procedure that should be emphasized for operating safety. Read the instructions carefully before performing the required procedure.

Heated Surface | Flammable | Electric shock | Pinched fingers

Prohibited | No Fire | Do not tear down | Do not touch

Instructions | Unplug | Ground/ Earth

Installing and Relocating Your Printer

⚠ CAUTION

Do not place the machine in a hot, humid, dusty, or poorly ventilated environment. Prolonged exposure to these adverse conditions can cause fire or electric shock.

Do not place the printer near heaters or near volatile, flammable, or combustible materials, such as curtains, that may catch fire.

Place the printer on a level and sturdy surface that can withstand a good weight. If tilted excessively, the machine may fall over and cause injuries.

Because the printer weighs 20kg fully assembled, therefore make sure that at least two people carry it.

To lift the printer, face the front and back of the printer and grip the recessed areas at the bottom left and right with both hands. Never try to lift the printer by gripping any other areas. Lifting the printer by gripping other areas can cause the printer to fall, resulting in injury.

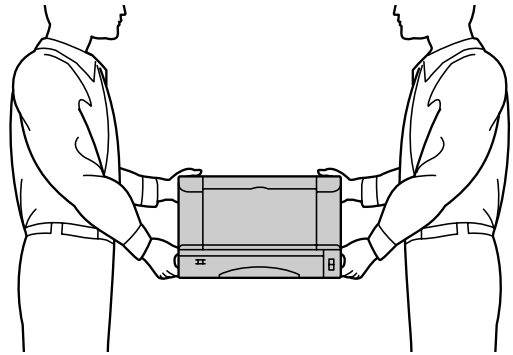

When lifting the printer, get a firm footing and bend your knees to avoid possible injuries to your back.

The machine has ventilation holes on the left, right, and rear sides. Ensure that the machine is installed with a minimum clearance of 100 mm from the right side, 100 mm from the left side, and 270mm from the rear side. A poorly ventilated machine can cause excessive internal heat and fire. The accompanying figure shows the minimum clearances required for normal operation, consumables replacement, and maintenance to ensure your machine operates at peak performance.

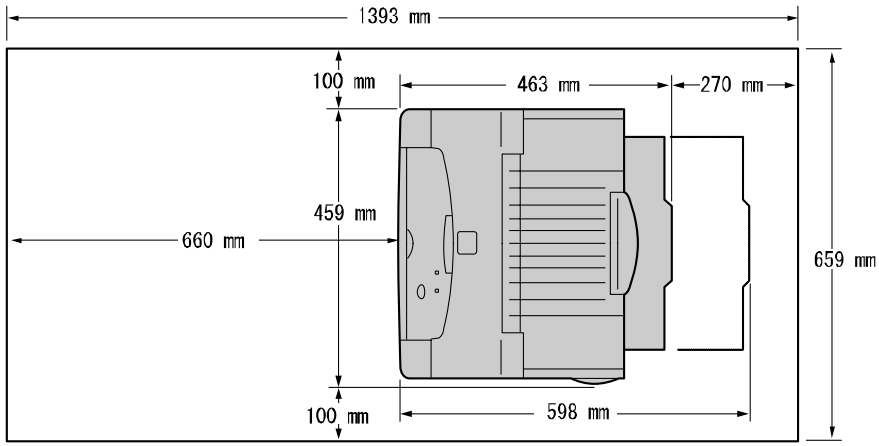

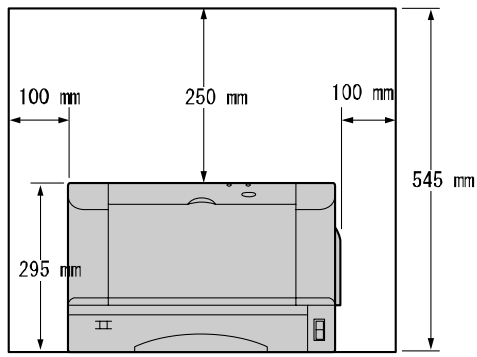

When moving the printer, be sure to unplug the power cord from the outlet. If the printer is moved with the power cord connected, it can cause damage to the cord, which could result in fire or electric shock.

When moving the printer, do not tilt it more than 10 degrees. If tilted excessively, the machine may fall over and cause injuries.

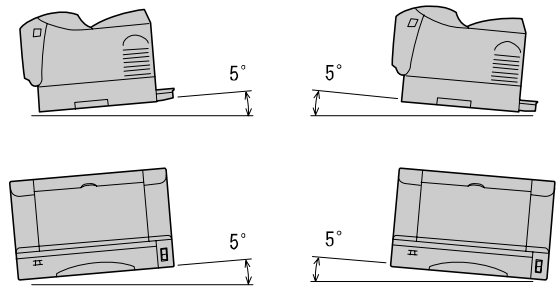

After installing the paper feeder, lock down the brakes on the casters at the front of the paper feeder. Failure to lock down the brakes can cause the printer to move unexpectedly, resulting in injury.

Other Precautions

- Place the printer in a location that meets the following conditions: Ambient temperature range of 10 to 32°C, relative humidity 15 to 85% (no condensation).
  If operating the printer with an ambient temperature of 32°C, the relative humidity should not exceed 65%.
  If the relative humidity reaches 85%, the ambient temperature should not exceed 28°C.

  NOTE *Do not place the printer in a room where there are sudden fluctuations in temperature, and do not move the printer from a cold place to a warm humid place. If you do, condensation may occur within the printer and print quality deteriorate.*

- Do not place the printer in direct sunlight, as this may damage the printer.
- When installing the printer, do not place it on an uneven surface where it could be tilt more than 5 degrees in any direction in order to prevent trays or consumables from falling out.
- When moving the printer, remove the toner cartridges. Do not reuse toner cartridges once you have removed them from the printer. Loose toner can spill inside the printer and deteriorate print quality.
- Do not place the printer directly next to an air conditioner or heater, as this affects the temperature inside the printer and can cause damage.

Precautions for Power and Earth Connections

⚠ **CAUTION**

Connect the power plug only to a properly rated power outlet. Otherwise, it can cause fire or electric shocks. If in doubt, contact your Lenovo Customer Service Center.

- Rated Power: 220-240 V 50/60 Hz 3.6A

Ensure that the plug connection is dustless. In a damp environment, a contaminated connector can draw a non-negligible amount of current that can generate heat and eventually cause fire over an extended period of time.

Always use the power cord provided with your printer. When an extension power cord is required, always use a properly rated cord.

- In China: AC 220V 3.6 A
- In other countries: Please contact your Lenovo Customer Service Center.

If you use a cord with an unspecified current rating, the printer or plug may emit smoke or become hot to the touch.

Do not attempt to modify, pull, bend, chafe, or otherwise damage the power cord. Do not place a heavy object on the cord. A damaged cord can cause fire or electric shocks.

Never touch a power cord with wet hands. This constitutes an electric shock hazard.

Stop operation immediately if your printer emits smoke, excessive heat, unusual noise or smell, or if water is spilt onto the printer. These conditions can cause fire. Immediately switch off and unplug the machine, and contact your Lenovo Customer Service Center.

To prevent fire or electric shocks, follow the instructions below based on your printer's configuration. If in doubt, contact your Lenovo Customer Service Center.

If the power cord is broken or insulated wires are exposed, ask your Lenovo Customer Service Center for a replacement. Using a damaged cord can cause fire or electric shocks.

⚠ CAUTION

Do not unplug or replug the printer while it is on. Unplugging a live connector can deform the plug and cause fire.

When unplugging the printer, grasp the plug instead of the cord. Forcibly pulling on a cord can damage it and cause fire or electric shock.

Be sure to switch off and unplug the printer before accessing the interior of the printer for cleaning, maintenance, or fault clearance. Access to a live printer's interior can cause electric shocks.

Once a month, unplug the printer and check the power cord for the following:

- The power cord is plugged firmly into a receptacle.
- The plug is not excessively heated, rusted, or bent.
- The plug and receptacle are free of dust.
- The cord is not cracked or frayed.

If you notice any unusual conditions, contact your Lenovo Customer Service Center.

When the printer is not used over an extended period of time, switch it off and unplug it. If an unused printer is left connected to a power source for a long period, degraded insulation can cause electric shocks, current leakages, or fire.

Switch off the machine before connecting the interface cable or options. Connecting the cable or options with a live machine can cause electric shock.

Other Precautions

- This printer may interfere with radio or television reception, causing flickering or distortion. This can be determined by turning the printer off and on. To correct interference, perform one, or a combination of the following procedures:
  - Move the printer away from TV and/or radio.
  - Reposition the printer, TV and/or radio.
  - If the printer, TV and/or radio are plugged into the same outlet, unplug them, then plug them into different outlets.
  - Reposition the TV and/or radio antennas and cables until the interference stops. For external antennas, consult your local electrician.
  - Use coaxial cable with the antennas

Operation Precautions

⚠ WARNING

Do not place any liquid containers such as vases or coffee cups on the printer. Liquids spilt on the printer may cause a fire and electrical shock hazard.

Do not place any metal parts such as staples or clips on the printer. If metal and flammable parts get into the printer, they can short-circuit internal components, and cause fire or electric shocks.

If debris (metal or liquid) gets into the printer, turn off and unplug the printer. Contact your Lenovo Customer Service Center. Operating a debris-contaminated printer can cause fire or electric shocks.

Never open or remove printer covers that are secured with screws unless specifically instructed to do so in the this manual. A high-voltage component can cause electric shocks.

Do not try to alter the machine configuration, or modify any parts. An unauthorized modification can cause smoke or fire.

This printer complies with the IEC60825 (Class 1) international laser standard. This means that the printer does not present any risk of injury to persons from laser radiation. Various covers confine the laser radiation to the inside of the printer; hence, users cannot incur injury from the laser under normal operating conditions. Removing covers, unless instructed to do so in this manual, can cause injury from laser radiation.

⚠ CAUTION

Never touch a labeled area found on or near the fusing unit. You can burn yourself. If a sheet of paper is wrapped around the fuser roller, do not try to remove it by yourself to avoid injuries or burns. Turn off the printer immediately and contact your Lenovo Customer Service Center.

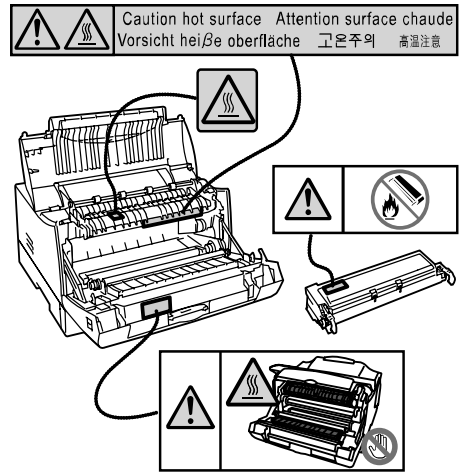

Do not place any heavy objects on the printer. An off-balance printer can fall over or the heavy object can fall, causing injuries.

Do not use highly flammable sprays or solvents in or around the printer, as this can result in fire.

When removing paper jams, make sure no pieces of paper are left inside the printer, as this can cause fire.
If the paper is wrapped around the fuser or roller, or you cannot see the jam you are trying to clear, do not attempt to remove the paper by yourself, as this may cause injury or burns. Turn off the printer immediately, and contact the place of purchase or your Lenovo Customer Service Center.

Do not place magnets near the safety switch of the printer. Magnets can activate the printer accidentally, resulting in injuries.

Other Precautions

- Refer to this manual for procedures on clearing paper jams and how to resolve any other troubles that may occur.

Notes on Handling Consumables

⚠ WARNING

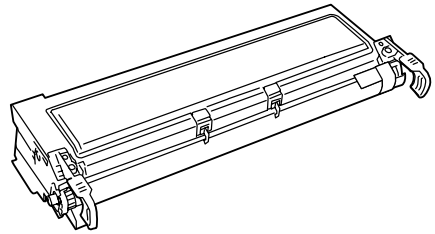

Never throw a toner cartridge into an open flame. It can cause an explosion and injuries.

Never throw a transfer roller cartridge into an open flame. It can cause an explosion and injuries.

Never throw a drum cartridge into an open flame. It can cause an explosion and injuries.

Other Precautions

- Do not open new consumables until you are ready to use them. Do not store consumables in the following conditions:
  - In high temperature or humidity
  - Near a naked flame
  - Exposed to direct sunlight
  - Dusty areas
- Before using consumables, read the user manual and precautions on the packaging.
- Administer emergency first aid as follows:
  - If you get toner in your eyes, rinse them well with plenty of clean water. Consult a physician if necessary.
  - If you get toner on your skin, wash it with soap and water and rinse well.
  - If you inhale toner, leave the area of exposure immediately and gargle with plenty of water.
  - If you swallow toner, induce vomiting and consult your physician immediately.
- When you remove the transfer roller cartridge from the printer because the waste toner collection box is full, do not attempt to empty the waste toner box and reuse the cartridge, as toner may spill inside the printer and cause damage.
- Do not tilt or shake drum cartridges or transfer roller cartridges that have been removed temporarily. The toner may leak and cause damage.

1 Installing the Printer

1.1 Checking the Package Contents, Unpacking the Printer 1-2
1.2 Installing the EP Cartridge 1-4
1.3 Connecting the Parallel or USB cables 1-7
1.4 Connecting the Power Cord to Switch On Printer 1-8
1.5 Loading Paper 1-9
1.6 Installing the Printer Driver 1-12

1.1 Checking the Package Contents, Unpacking the Printer

1. Check that all items in the packaging box are available.

- Retain the packaging materials and box for future use if there is a possibility that the printer will be moved over long distances.

  - This Printer
  - EP Cartridge
  - Driver CD-ROM
  - Power Cord
  - USB Cable
  - Quick Setup Guide
  - User's Guide

2. Remove the printer from the packaging box and carry it to the installation location. Ensure that the installation location is equipped with the following conditions or conditions stated in “Precautions for Setting and Moving the Printer”.

- Do not expose the printer to direct sunlight.
- Do not expose the printer to direct draft of air-conditioner or heater.
- Temperature range 10 - 32°C, humidity range 15 - 85% (no condensation). Humidity should be 70% or below at 32°C, and temperature should be 28°C or below at 85% humidity.

Note

- Sudden temperature fluctuations can affect print quality. Rapid heating of a cold room or moving the printer from a location with low humidity/temperature to high humidity/temperature can cause condensation inside the printer, directly interfering with image transfer. When condensation occurs, leave the printer alone for at least 1 hour to acclimate to the environment before using it.

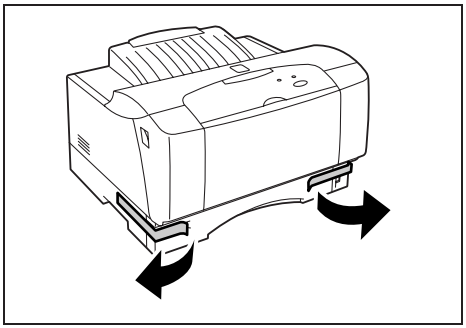

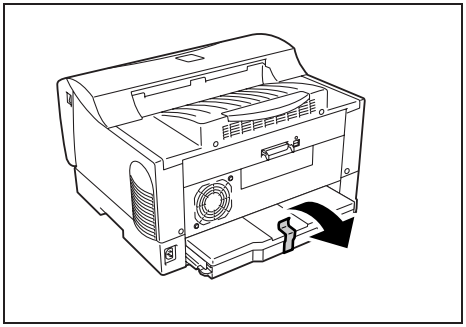

3. When the printer is first taken out of the packaging box, the paper tray of the printer is taped as shown in the figure. Remove the tapes.

1.2 Installing the EP Cartridge

When handling the EP cartridge, take note of the following points:

⚠ **WARNING**

- Never throw a EP cartridge into an open flame. It can cause an explosion and you can get burnt.

- Do not subject it to direct sunlight or strong light.
- When installing the EP cartridge, select a location not subject to strong light and try to finish the installation within 5 minutes.
- Do not touch the surface of the photosensitive drum. Do not let the EP cartridge stand or place it upside down. The drum might get damaged.
- A drum shutter protects the photosensitive drum from light. Do not open the drum shutter.
- Although the toner is not harmful to the body, wash it off immediately if your hands or clothes are stained with it.
- It is recommended to use up the EP cartridge within 1 year after opening it.

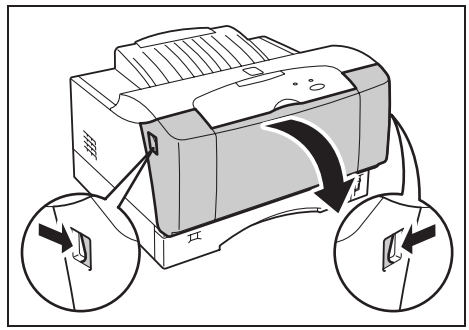

1. Open the front cover while pressing the front cover open/close levers of the printer.

Important

- Do not touch any parts inside the printer.

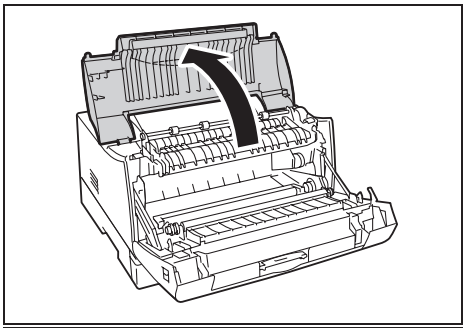

2. Hold both sides of the top cover by the grip and open it slowly.

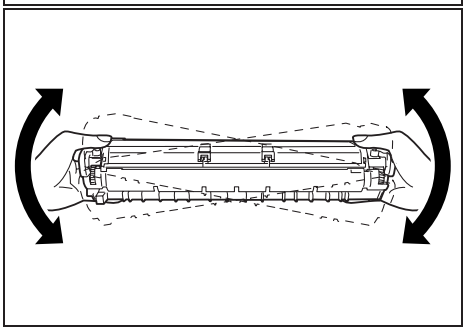

3. Take the EP cartridge out of the packaging box and shake it 7 to 8 times as shown in the figure.

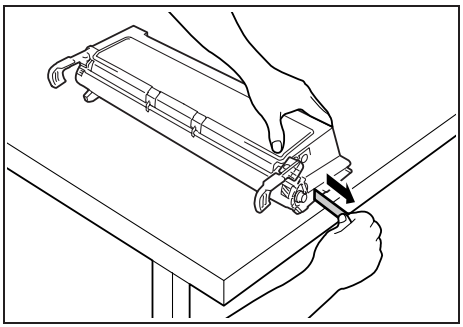

4. Place the EP cartridge on a flat surface and pull out the seal horizontally.

Important

- When pulling out the seal, pull it out horizontally. The tape might break if it is pulled out diagonally.
- After the seal has been pulled out, do not shake or bump the EP cartridge.

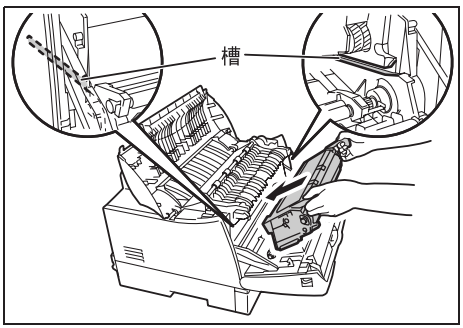

5. Hold the EP cartridge by the grip and align the protrusions of the cartridge with the grooves inside the printer, and then slide it into the grooves as shown in the figure.

Important

- Do not touch any parts inside the printer.
- Ensure that the EP cartridge is firmly set.

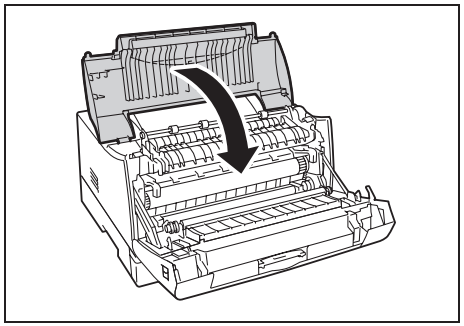

6. Close the top cover.

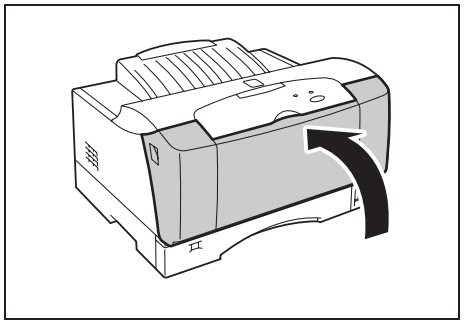

7. Close the front cover until it clicks.

1.3 Connecting the Parallel or USB cables

The printer can use a parallel cable or USB cable.
Connect the interface cable to be used to the printer.

Important

- Connect a USB cable only after the printer driver has been installed on the computer.

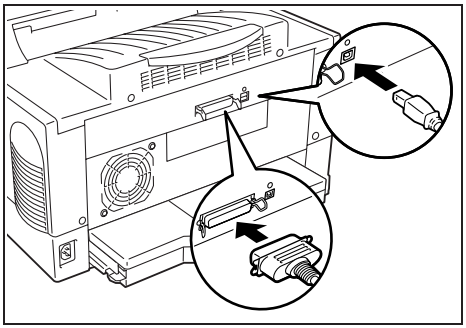

1. For USB cable, connect it to the interface connector at the back of the printer.

For parallel cable, lift up the wire clip on both sides to secure it after it has been inserted into the connector.

2. Connect the other end of the cable to the interface connector of the computer.

1.4 Connecting the Power Cord to Switch On Printer

When connecting the power cord, take heed of the warning and caution items stated in “Precautions for Power & Earth Connection” (see page xiii).

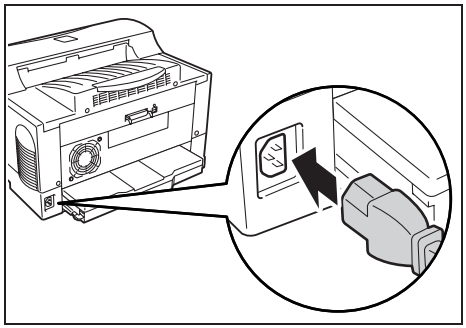

1. Connect the power cord to the power cord connector at the back of the printer.

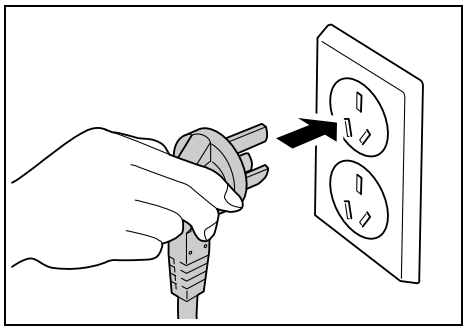

2. Connect the other end of the power cord to the power outlet.

Note

- Do not connect the power cord of the printer to the power outlet of the computer.

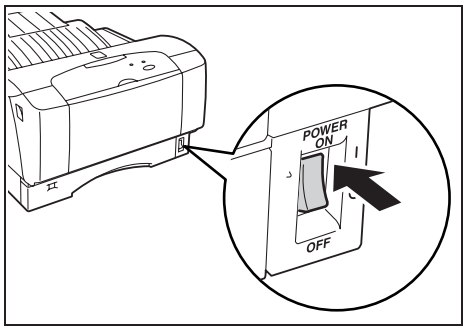

3. Press the power switch of the printer to the <|> position. The power and the light of the <○> (Print-ready) indicator will be switched on.

1.5 Loading Paper

This section explains how to load A4 size plain paper in the landscape orientation in the paper tray. For details on loading envelopes, refer to “2.2.3 Envelopes” and for details on loading non-standard size paper, refer to “2.2.3 Non-standard Size Paper”.

Portrait orientation **Landscape orientation**

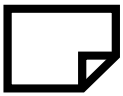

Refer to

- Types and sizes of paper that can be used: “2.1 Paper Specifications”.

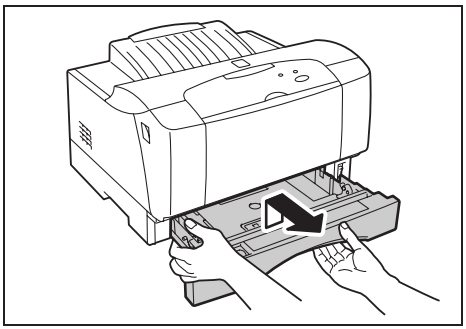

1. Hold the paper tray with both hands and pull it out gently by lifting up the tray slightly.

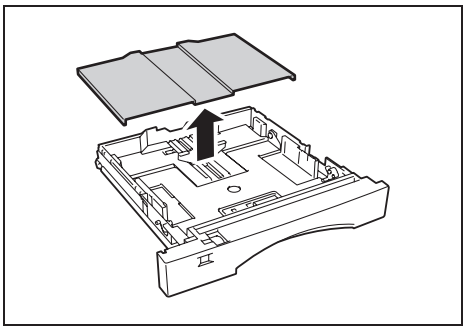

2. Place the paper tray on a flat surface and remove the lid.

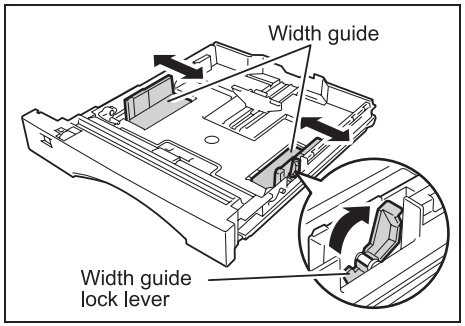

3. Raise up the width guide lock lever, and then slide the right width guide to the desired paper size.

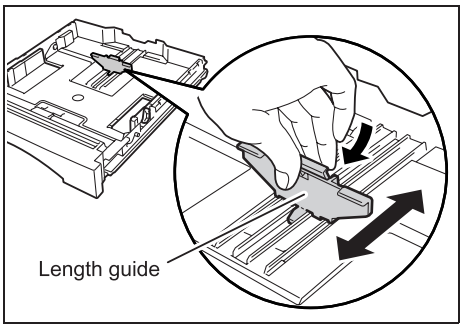

4. Squeeze the length guide and slide it to the desired paper size.

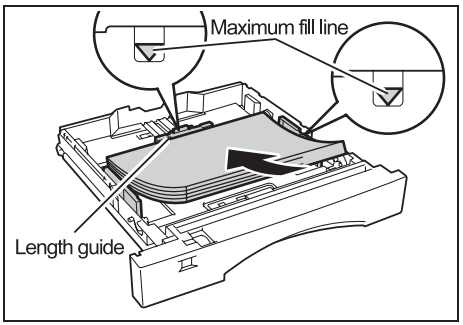

5. Load the paper with the side to be printed facing up and with all four corners aligned.

Important

- Do not fan paper to separate a ream. It causes static electricity, which can lead to the paper jams.
- Do not load paper exceeding the maximum fill line (▽) or the maximum capacity allowed.
- Align the right width guide with the paper width correctly. If the right width guide is not in place, the paper will not be properly fed and may cause paper jams.
- Push down the lift plate before loading the paper or the paper tray cannot be attached back to the printer.

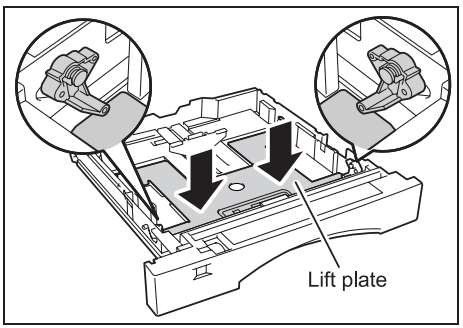

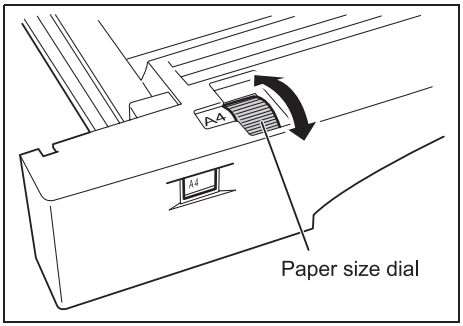

6. Toggle the paper size dial to match the size of the loaded paper.

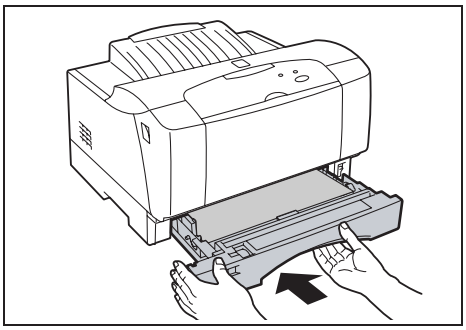

7. Close the lid of the paper tray and push the tray into the printer completely.

Important

- The lid of the tray must be firmly closed. If not, the paper might become misaligned.

Note

- Do not insert the paper tray from the back side of the printer. It causes the damage to the tray.

1.6 Installing the Printer Driver

1.6.1 Installing the Driver

This section explains the procedure for installing the printer driver in Windows OS, giving an example of installing the printer under Windows XP.

NOTE You must be logged on as an admin before installing the printer driver under Windows 2000, Windows XP, Windows Vista or Windows 7.

1.6.2 Installing the Printer Driver for Parallel

1. Turn the computer power on.

2. Start the Windows XP, and log on as an admin. Turn the printer power on.

   When the printer is connected to the computer via a parallel cable, the “Found New Hardware” dialog box will display after Windows XP is started. In this case, click Cancel to close the dialog box.

3. Insert the supplied CD-ROM into your computer’s CD-ROM drive, then the appropriate driver will be installed automatically according to your computer’s OS. The figure below appears:

   HINT If the dialog box is not displayed automatically, double click the “Install.exe” icon under the Installer folder in the CD-ROM.

4. Follow the screen prompts, click “Software Installation” and “Agree” buttons in turn to start the installation wizard.

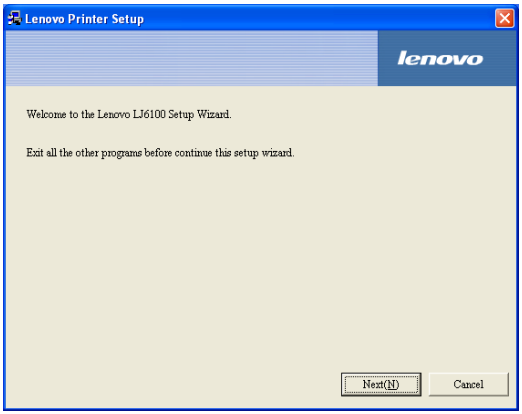

5. Click the Continue Anyway button to continue with this installation when the “Windows Logo is uncertified” dialog box appears.

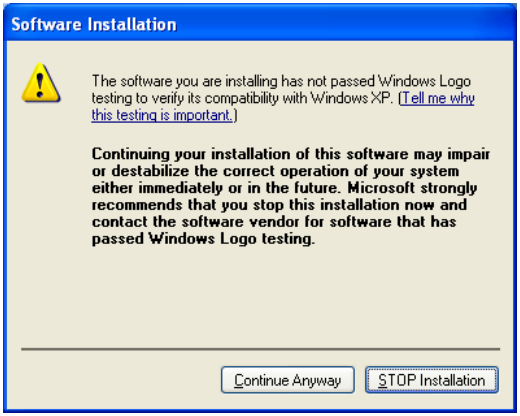

6. Until the completion dialog appears.

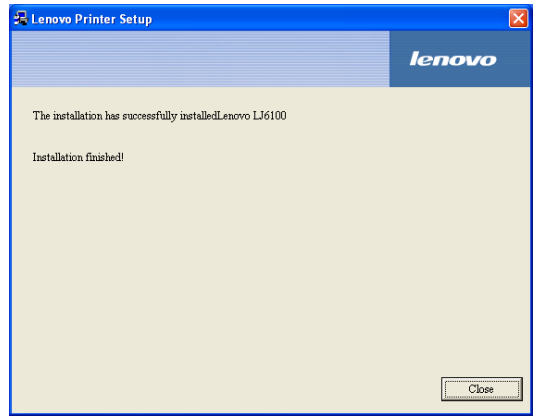

7. Remove the Driver CD-ROM from the CD-ROM drive and then restart your computer.

1.6.3 Installing the Printer Driver for USB

1. Turn the printer power on.

2. Turn the computer power on, start the Windows XP, and log on as an admin.

First install the Parallel drivers according to step 1.6.2.

When the printer is connected to the computer via a USB cable, after Windows XP is started, the “Found New Hardware” dialog box will display, and then the “Found New Hardware Wizard” dialog box appears. Select “Install the software automatically (Recommended)”.

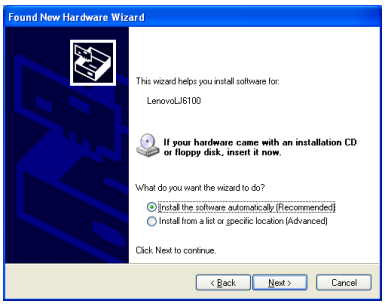

3. Insert the supplied CD-ROM into the CD-ROM drive.

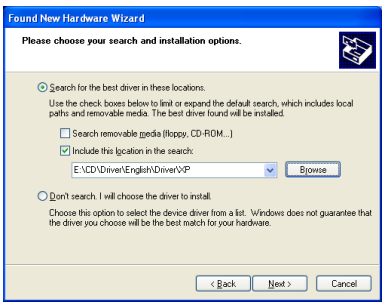

4. Click the "Next" button.

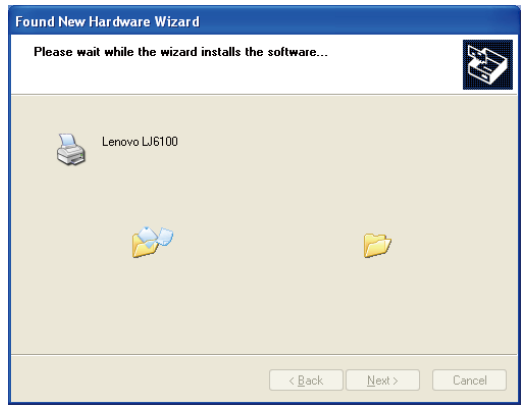

5. Click the Continue Anyway button to continue with this installation when the “Windows Logo is uncertified” dialog box appeared.

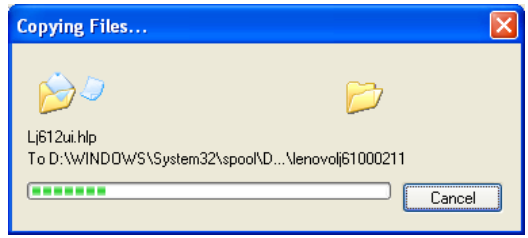

6. After installation is completed, click the "Finish" button.

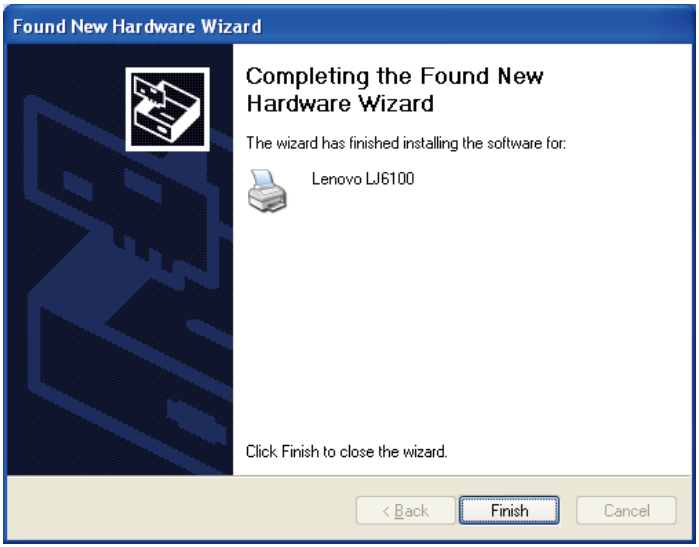

7. Select the “Printers and Faxes” in the Control Panel, and then set the Lenovo LJ6100 as the default printer, as shown in the figure:

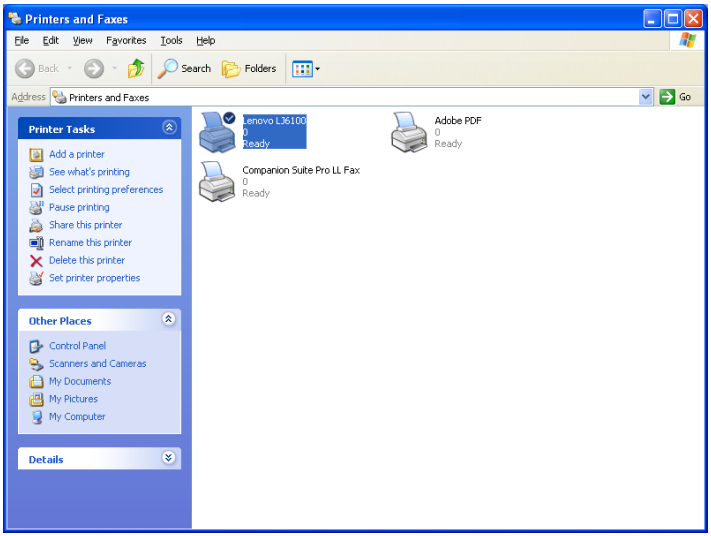

Now, the printer is ready for printing.

2 Maintenance

2.1 Paper Specifications 2-2
2.2 Loading Paper 2-7
2.3 Cleaning 2-15

2.1 Paper Specifications

If paper you used is unsuitable for printing, they may cause paper jams and deterioration in print quality. We recommend you to use the types of paper listed below to obtain the best results from your printer.

2.1.1 Usable Paper

■ Plain paper (general- purpose)

Lenovo LJ6100 Laser Printer can print most types of generally sold paper (called the generic paper). Refer to the following table and use acceptable paper. However, we recommend use of standard paper described below to obtain the highest-quality printing.

Paper Source	Standard
Manual Feed Tray	G.S.M.: 64 to 128g/ ㎡
Main Tray	G.S.M.: 64 to 81.4g/ ㎡

HINT

- G.S.M. is a measure of the substance of paper expressed in grammes per square metre, which does not depend on the number of sheets in the ream.
- The ream weight refers to the weight of 1,000 sheets of duodecimo (768 x 1,091 mm) paper.

■ Plain Paper (standard)

The types of standard paper for Lenovo LJ6100 Laser printer are as follows:

Paper Type	Standard
FX P paper	G.S.M.: 64g/ ㎡

Special Media

Using MP tray enables to print the following types of paper in addition to plain paper (general-purpose and standard). These types of paper are called special paper.

Paper/Media Type	Paper Size (Dimensions)	Paper Name
Transparency (for black and white)	A4 (210 x 297mm)	XEROX P/N JE-001
Labels	A4 (210 x 297mm) (Use only uncut label sheets)	XEROX P/N V860
Envelopes	105 x 234 mm (G.S.M.: 70 to 80g/ ㎡)	landscape (horizontal) type envelope: No.4 (LIFE E506)
Postcard	100 x 148 mm	Official postcard
Heavy weight paper (G.S.M: 128 g/ ㎡ max.)	A4 (210 x 297mm) B4 (257 x 364 mm) A3 (297 x 420mm)	
	A4 (210 x 297mm) B4 (257 x 364 mm)	Xerox EP coloured paper
	A4 (210 x 297mm) B4 (257 x 364 mm) A3 (297 x 420mm)	MX paper

NOTE

- To print labels, set paper after correcting curl at the end.
- Printing is disabled to the official multi-colour printed postcards like "Kamo-mail."
- Official postcards cannot be printed on both sides.
- When printing opaque film, eliminate the upward curl.
- When printing envelopes, care should be taken to the following items:
  - Load envelopes after firmly pressing on the folded four sides.
  - Envelopes cannot be printed on the back.
  - Eliminate curls (particularly downward curl) at the ends of envelopes before loading.
  - Envelopes with adhesive flap are not printable.
  - Foil-covered or embossed envelopes are not printable.
  - Envelopes already printed with a laser, thermal, ink-jet printer, etc. are not printable.
  - Load envelopes with flaps closed.

■ Paper Types Usable for Paper Trays

Types of paper that can be loaded to manual feed tray and main tray are as follows:

- Manual feed tray

The following types of paper can be set to the manual feed tray:

Paper Type	Maximum Capacity	Paper Size
Standard paper	30 sheets	A3, A4 Landscape
Generic paper	HINT The number of sheets that can be loaded varies according to the thickness of paper.	A3, B4, A4 Landscape, B5 Landscape, A5 Landscape, 8.5 x 11" (Letter) Landscape
Postal card (portrait)	10 sheets	
Labels	10 sheets	
Transparency	10 Sheets	

- Types of paper that can be loaded to main tray are as follows:

Paper Type	Maximum Capacity	Paper Size
Standard paper	250 sheets	A3, A4 Landscape
Generic paper	Up to 22 mm high HINT The number of sheets that can be loaded varies according to the thickness of paper.	A3, B4, A4 Landscape, B5 Landscape, A5 Landscape, 8.5 x 11" (Letter) Landscape

HINT The following are examples of width, length and landscape/portrait orientations mentioned in the table above.

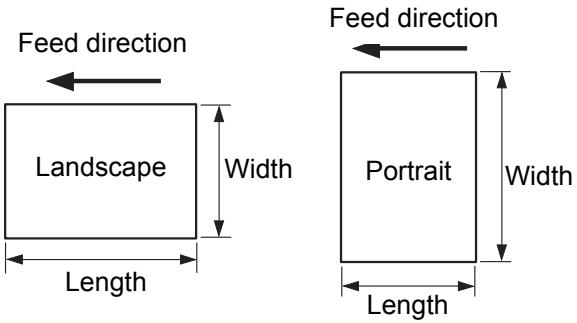

2.1.2 Unsuitable Paper

Paper with any of the following properties may cause paper jams or machine faults, and therefore should not be used.

- Fuji Xerox for full colour jobs transparency
- Inkjet paper
- Too thick or thin paper
- Pre-printed paper
- Folded, wrinkled or torn paper
- Damp or wet paper
- Curled paper
- Sheets adhered with static electricity
- Layered or adhesive paper and envelope
- Specially coated paper
- Treated-surface coloured paper
- Pre-printed with ink that is affected at 155 ℃
- Heat sensitive paper
- Carbon paper
- Paper with staples, clips, ribbon or tape attached
- Rough-surface paper, such as textured or fibre form paper

- If acidic paper is used, characters may fade; in which case change to a neutral paper
- Embossed envelope
- Envelope with clasps attached to them
- Non-full page labels or cut labels
- T-shirt transfer paper
- Preprinted paper
- Illuminated paper
- Digital coated glossy paper
- Adhesive paper (transparent/colourless)
- clean paper
- Paper coated with white micro-powder for preventing set-off
- Punched or perforated paper
- Use of recycled paper and labels is limited.
- Print quality of postcards, envelopes, transparencies and labels may be inferior to that of plain paper manufactured to the standard.

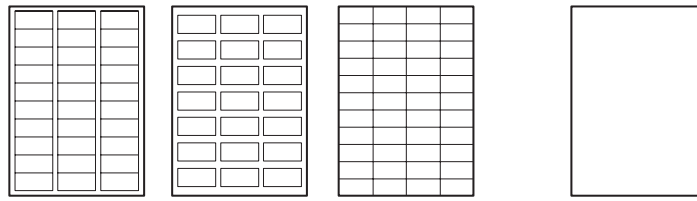

2.1.3 Storing Paper

Even appropriate paper degenerate under a wrong storage state, and it results in paper jam, reduction of printing quality, and fault.

■ **Paper should be stored in a location satisfying the following conditions:**

- Temperature: Between 10°C and 30°C
- Relative humidity: Between 30% and 65%

■ **Observe the following notes:**

- The location should have low humidity.
- After opening a package, re-pack the unused paper with the wrapping paper, and store in a cabinet or at a place with low humidity.
- Paper should be stored on a flat surface.
- Make sure that the paper are not wrinkled, folded or curled.
- Do not store paper under direct sunlight.

2.2 Loading Paper

This section describes how to load paper into the paper tray.

HINT For applicable types of paper for each type of paper tray, see "2.1 Paper Specifications."

2.2.1 Follow the procedure below to load plain paper into the Main Tray.

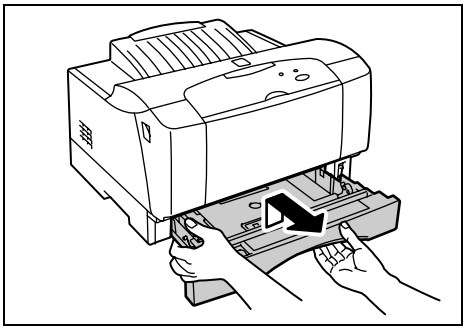

1. Hold the paper tray with both hands and pull it out gently by lifting up it slightly.

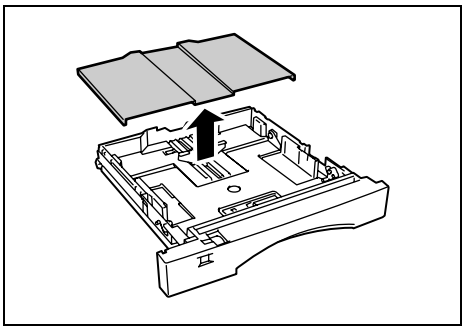

2. Place the paper tray on a flat surface and remove the lid.

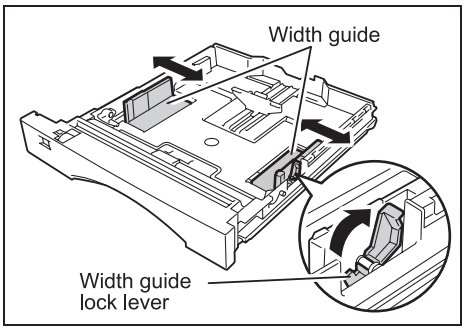

3. Raise up the width guide lock lever, and then slide the width guide to the desired paper size.

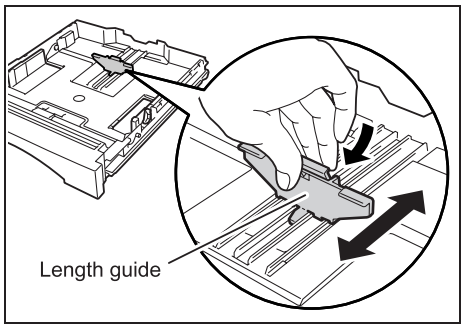

4. Squeeze the length guide and slide it to the desired paper size.

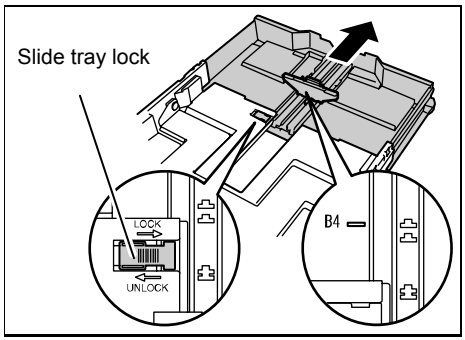

<When loading B4 or A3 paper>
Move the slide tray lock tab in the tray outward to [UNLOCK] it and pull its extendable part to the front until it reaches the desired paper size.Then move the tab back to [LOCK] and slide the length guide to B4 or A3 while squeezing it.

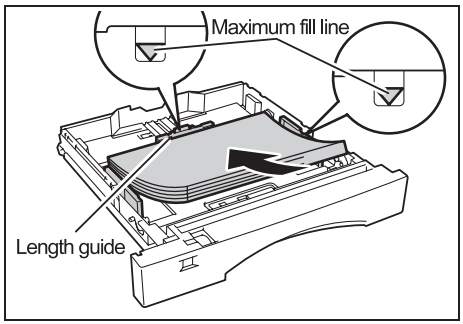

5. Load the paper with the side to be printed facing up and with all 4 corners aligned.

⚠ **WARNING**

- Do not fan paper to separate a ream. It causes static electricity, which can lead to paper jams.
- Do not load paper exceeding the maximum fill line (▽) or the maximum capacity allowed.
- Push down the lift plate before loading the paper or the paper tray cannot be reinserted into the printer.
- Align the width guide with the paper width correctly. If the width guide is not in place, the paper will not be properly fed and cause paper jams.

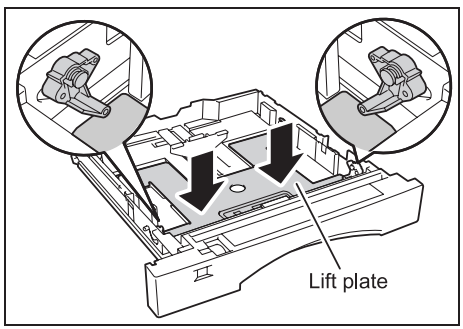

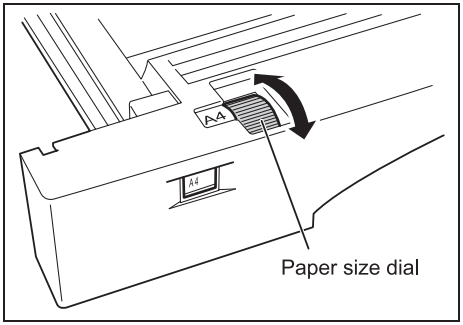

6. Turn the paper size dial to match the size of the loaded paper.

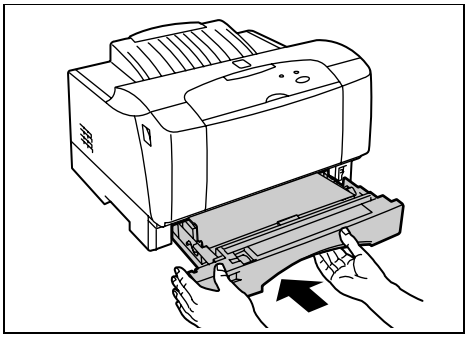

7. Close the lid of the paper tray and push the paper tray completely into the printer.

Important

- The lid of the paper tray must be firmly closed. If not, the paper might be misaligned.
- When the paper tray is extended, close the lid of the extendable part.

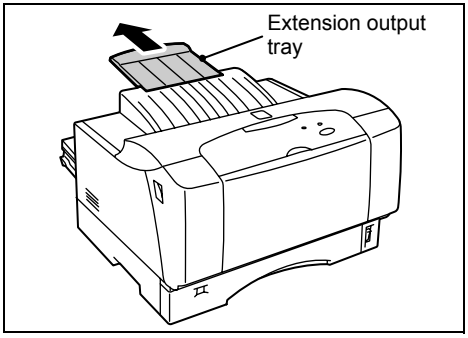

⚠ **WARNING**

- Do not insert the paper tray from the back side of the printer. Doing so may damage the paper tray.
- If A3 or B4 size paper is output, pull out the extension output tray.

2.2.2 Setting the various types of paper on the Manual Feed Tray

For example: transparencies, envelopes, or labels. The following procedure explains how to load paper into the manual feed tray.

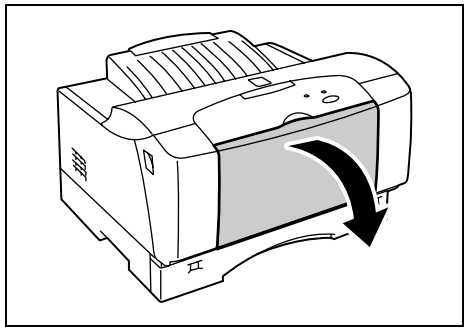

1. Open the manual feed tray holding the depressed area and pulling out and down as shown in the figure.

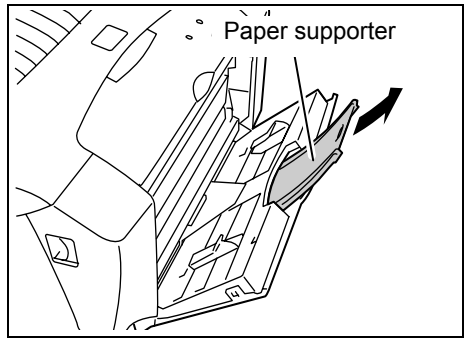

<When loading paper that is longer than B5 long edge first>
Pull the paper supporter out as shown in the figure to support the paper.

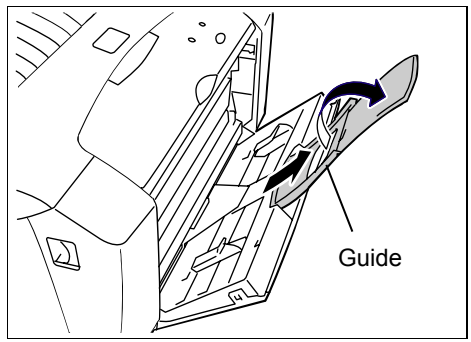

<When loading paper that is longer than B4 short edge first>
Pull the paper supporter out and open it as shown in the figure to support the paper.

⚠ **WARNING**

- When loading A5 size paper, envelopes, postcards, or reply postcards, you do not have to use the paper supporter. Load the paper without pulling out the paper supporter.

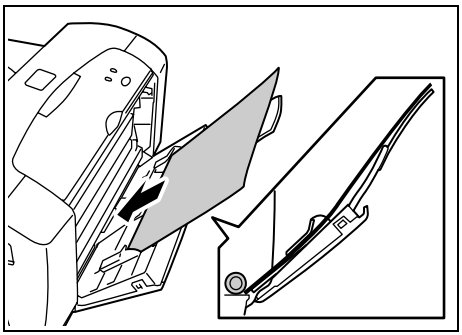

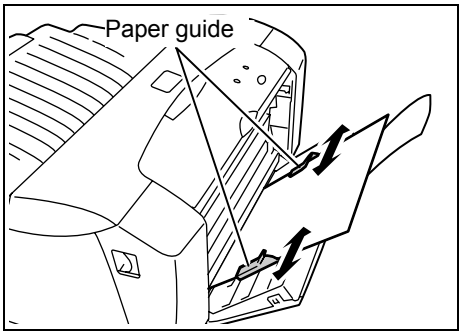

2. Load the paper with the print side facing down and with the paper inserted fully as shown in the figure.

⚠ **WARNING**

- Do not fan paper to separate a ream. It causes static electricity, which can lead to paper jams.
- Load A3, B4, postcard, reply postcard, or envelope size media short edge first into the manual feed tray. However, load A4, B5, A5, or letter size media long edge first in the paper tray.

3. Adjust the paper guides on each side so than they rest lightly against the loaded paper.

2.2.3 Precautions for Loading Paper to the Paper Tray

■ Official postcard

- If official postcards are curled, correct the curl so that the width of curl will be within 2 mm. When loading to the paper tray, load the postcards with the curled surface (convex) facing downward as the figure below.

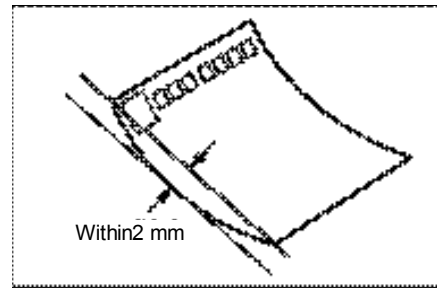

- Official postcards printed by a printer (e.g. New Year's card, etc.) may be coated with white powder to prevent set-off. Repeated printing of such official postcards with this printer may deteriorate the frictional force of the roller inside the printer due to the white powder, failing to feed official postcards correctly.

- When loading official postcards in bundle into the paper tray, loosen them fully before setting.

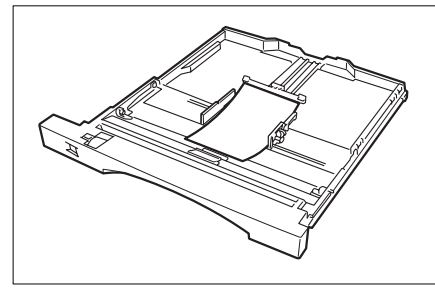

- Correct the curling of printed official postcards so that the curl will be within 5 mm. Greater curl may cause inconveniences in processing them with the postal code reader.

- When loading reply postcards into the paper tray, they can be loaded in either portrait or landscape direction. The figures below indicate respective setting direction:

Landscape, reply postcards

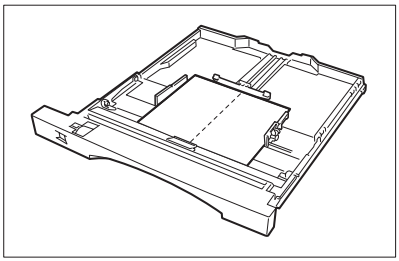

Portrait, reply postcards

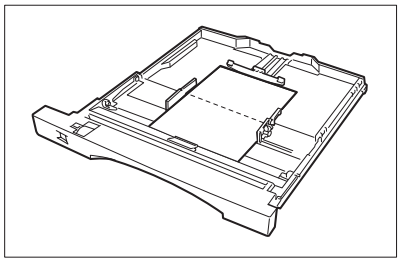

■ Transparency

- Load transparencies to the paper tray after fully loosening.
- Transparencies may generate static depending on their type, disabling normal paper feed.

■ Labels

- Load labels to the paper tray after fully loosening them.
- Labels may become curled depending on the storage condition, disabling normal paper feed. Correct the curling before printing.
- When printing on labels, care should be taken for avoiding characters or illustration from falling on the intervals.

■ Envelopes

NOTE Don't print on the flap (folded-back portion of an envelope). Or, it may cause jamming of paper or lead to a fault of the printer.

- Use landscape type envelope No. 4 for printing.
- Before loading the envelopes, place a bundle of envelopes on a flat surface, fold the flaps correctly so that they will remain folded. Setting the envelopes without folding the flaps correctly may lead to a paper size error.
- Fully loosen the envelopes by holding them by both ends before loading to the paper tray.

■ Non-standard size paper

- Normal paper feed is disabled with irregular-shaped paper other than oblong or paper whose corners are not right-angled. These paper cause not only jamming but also machine fault.

  NOTE When using non-standard size paper, the range of applicable paper thickness may become narrower than the standard size paper. Users are recommended to check the printing operation by fully making test printing in advance.

- Normal printing may be disabled depending on paper quality, direction of perforation, pre-printing, perforated paper and perforation.
- Paper may curl sharply after printing depending on the type of paper and the direction of perforation.
- Printed paper may fail to be normally stack. In this case, remove the paper.

2.3 Cleaning

To maintain the printer in good working condition, always ready to output clean printing, it is important to clean the printer. This section describes how to clean the printer. To have the printer operate properly, users are recommended to clean the illustrated points periodically or as may be necessary. For cleaning, use a clean dry lint-free cloth.

> ⚠ **CAUTION**
> Be sure to switch off and unplug the machine before accessing the interior of the machine for cleaning, maintenance, or fault clearance. Access to a live machine's interior can cause electric shocks.

NOTE Immediately after turning the power off, area around the fusing unit, metal sections inside the printer and the EP cartridge handles may have high temperature. To avoid the hazards of burning, handle the printer after it has fully cooled down.

2.3.1 Cleaning the Rib Plate

Clean the rib plate if the print becomes scratchy in the paper feed direction, white streaks appear or the outline of characters and black portion become blurred.

> ⚠ **CAUTION**
> - Never touch areas labeled as "High Voltage." You can get an electric shock.
> - Never touch a labeled area found on or near the fusing unit. You can get burnt.
> If a sheet of paper is wrapped around the heat roller, do not try to remove it by yourself to avoid injuries or burns. Turn off the printer immediately and contact your Lenovo Customer Service Center.

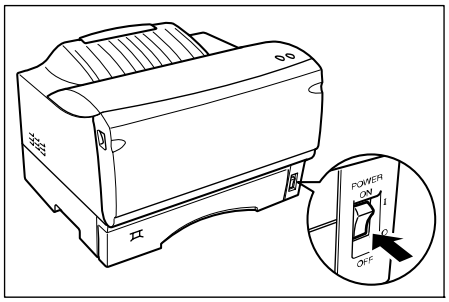

1 Push [O] on the power switch located on the front of the printer to turn the printer power off. Pull out the power cord from the power connector on the back of the printer and the wall outlet.

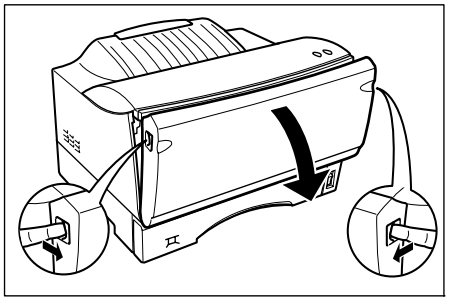

2 Pull and open the front cover slowly while pressing the right and left front cover release levers.

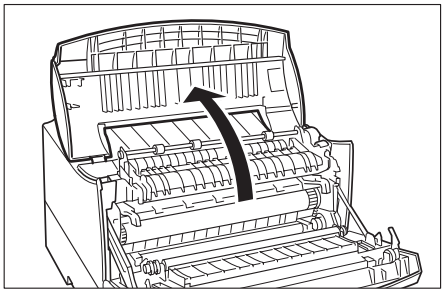

3 Hold the left and right ends of the top cover and open it slowly.

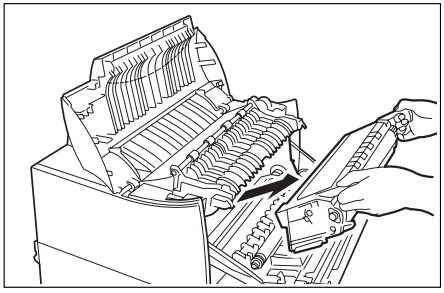

4 Hold the EP cartridge handles as shown and remove the EP cartridge. Remove the EP cartridge by sliding it toward you.

NOTE Care should be taken not to contaminate hands and clothes with toner. If toner is attached to hands and clothes, wash it down with water.

HINT Don’t place an EP cartridge removed for cleaning in upright position or upside down. Place it on a flat surface by avoiding a place under the direct rays of the sun or dusty place.

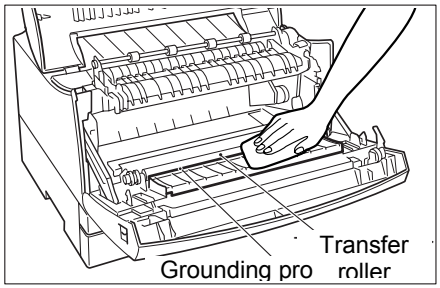

5 Wipe contamination off the rib plate using a clean dry cloth.

NOTE Care should be taken not to touch the transfer roller or grounding probe.

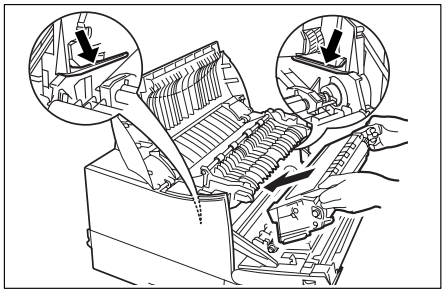

6 Reinstall the EP cartridge to the printer.
Hold the EP cartridge to the front of the printer by the handles. Set it to the printer by matching the protrusion on both sides of the EP cartridge to the groove inside the printer.
Check that the EP cartridge does not float or is not slanted and set fully to the end.

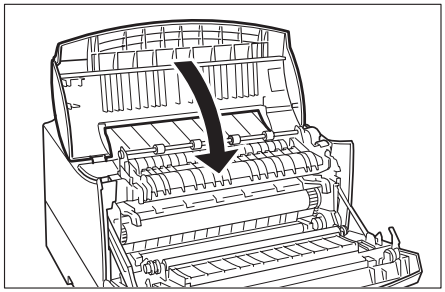

7 Slowly close the top cover.

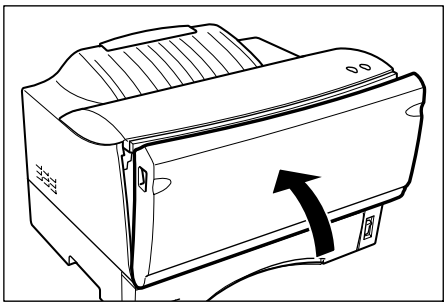

8 Slowly close the front cover.

Push up the front cover until it clicks, and check that the cover is properly closed.

9 Insert the power cord plug to the power connector on the back of the printer. Insert the other end to the wall outlet.

10 Push [I] on the power switch located on the front of the printer to turn the printer power on.

2.3.2 Cleaning the Exterior of the Printer

The exterior of the printer should be cleaned about once a month to keep it in good condition.
Wipe any dirt from the outside of the printer with a clean cloth dampened with water. If the stains cannot be wiped off easily, wipe with a soft cloth that has been moistened with diluted neutral detergent.

NOTE
- Never spray cleaning liquid directly onto the printer, as the spray could enter the printer and cause a malfunction. Further, use only neutral detergent to clean the printer.
- Never lubricate the printer with oil. Normal printer maintenance does not require lubrication of any kind.
- Don't apply alcohol, thinner, etc. to the printer as they damage the printer surfaces.

Steps:

1 Push [O] on the power switch located on the front of the printer to turn the printer power off. Pull out the power cord from the power cord receptacle on the back of the printer and from the wall outlet.

2 Wipe any dirt from the outside of the printer with a clean cloth dampened with water.

HINT If the stains cannot be wiped off easily, wipe with a soft cloth that has been moistened with diluted neutral detergent.

3 Then clean it again with a clean dry cloth to absorb the water.

Insert the power cord plug to the power cord receptacle on the back of the printer and the other end to the wall outlet.

4 Push [I] on the power switch located on the front of the printer to turn the printer power on.

2.3.3 Cleaning the Inside of the Printer

After correcting paper jam or replacing the EP cartridge, check the inside of the printer before closing the top cover.

⚠ **CAUTION**

- Never touch areas labeled as "High Voltage." You can get an electric shock.
- Never touch a labeled area found on or near the fusing unit. You can get burnt. If a sheet of paper is wrapped around the heat roller, do not try to remove it by yourself to avoid injuries or burns. Turn off the printer immediately and contact your Lenovo Customer Service Center.

- Remove the remaining piece of torn paper if any.
- Wipe dusts and contamination if any with a clean dry cloth.

3 Troubleshooting

3.1 Trouble Types 3-2
3.2 Power does not come on 3-3
3.3 Unable to Print 3-4
3.4 Print Quality Problems 3-6
3.5 Other Problems 3-11
3.6 State of the LED Indicator 3-12

3.1 Trouble Types

If a trouble occurs with the printer, and you are not sure of the corrective action, check the following items of symptoms and see if any of them falls on the type of trouble you have. If you find the corresponding item, then solve the trouble by referring to the solution provided there.

Condition	Solution	Reference
Power does not come on ● The power does not come on. ● The power frequently failures.	"3.2 Power does not come on"	 3-3 3-3
Unable to print ● Unable to print although data has been transferred. ● Takes time before printing starts ● Paper size loaded into the main tray or optional tray is not recognized. ● Unable to print from the MP tray.	"3.3 Unable to Print"	 3-4 3-4 3-4 3-5
Print Quality Problems ● A blank page is printed. ● A completely black page is printed. ● The printed image is faded. ● Black dots or stains are printed. ● Black lines are printed. ● Recurring stains are found. ● Hair-line marks appeared in or around black half-tone printing. ● Shadows appeared around areas of solid black printing. ● White dots appeared in areas of solid black printing. ● Poor fusing ● Some parts are not printed. ● Printing is slanted. Unable to print at a desired position. ● Vertical blanks are printed. ● Wrinkled paper. ● Printing is smudged.	"3.4 Print Quality Problem"	 3-6 3-6 3-7 3-7 3-7 3-7 3-8 3-8 3-8 3-8 3-9 3-9 3-9 3-9 3-10
Paper is not fed or jammed	"Chapter 4 Clearing Paper Jams"	4-1~ 4-8
Other problems/Unusual sounds	"3.5 Other Problems"	3-11

3.2 Power does not come on

If the power supply has abnormality, see the following table and solve the trouble accordingly:

Condition	Verification	Solution
The power does come on.	Is the printer power turned on?	Turn power on by pushing [I] on the printer power switch.
	Is the power cord loose or unplugged?	Turn the printer power off, and plug the power cord firmly. Then, turn the printer power on again.
	Is connection made to a wall outlet of proper voltage (220 V)?	Connect the printer exclusively to a wall outlet of rated voltage of 220 V with the rated current of 15A and over.
	Is the power supplied to the wall outlet?	Check the condition of the distribution panel, etc.
The power frequently failures.	The printer may be faulty.	Turn the printer power off, unplug the power plug and contact your Lenovo Customer Service Center.
	Is the power cord loose or unplugged?	Turn the printer power off, and plug the power cord firmly. Then, turn the printer power on again.

3.3 Unable to Print

If unable to print properly, see the following table and solve the trouble accordingly:

Condition	Verification	Solution
Unable to print although data has been transferred.	Is red LED indicator lit? Is green LED indicator blinking? Is green LED indicator off?	See "3.6 State of the LED Indicator " and solve the problem according to the state of the LED indicator.
Takes time before printing starts.	Is the printer cable appropriate to this printer?	Check the type of the printer cable and make connection again.
	Is the printer cable properly connected?	
	Has paper run out or the paper of specified size run out?	Replenish paper according to "2.2 Loading Paper."
	Isn't the data currently being transmitted?	This printer processes data by page for printing. Therefore, printing does not start until data for one page is completely transferred. When forwarding large volume of data in graphic mode, it takes time to transfer data. Wait a moment until data transfer is completed.
Paper size loaded into the main tray is not recognized.	Is the paper loaded properly?	Load paper properly according to "2.2 Loading Paper."
	Is the paper size set dial properly set up?	Set the paper size set dial properly according to "2.2 Loading Paper."

Condition	Verification	Solution
Unable to print from the main tray.	Is the paper size set dial properly set up?	Set the paper size set dial properly according to "2.2 Loading Paper." If setting is made for A3, A4, A5, B4, B5 or Letter size, set a paper size that was loaded with the paper size set dial. If setting is made for postcards, reply postcards, envelopes or non-standard size paper, set the paper size set dial to "non-standard size paper."
	Is the paper loaded properly?	Load paper properly to the main tray according to "2.2 Loading Paper."

3.4 Print Quality Problems

3.4.1 All Blank or All Black Output

Condition	Verification	Solution
A blank page is printed. 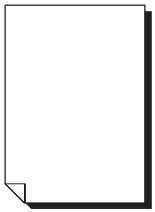	Is the toner seal of the EP cartridge pull out?	Pull out the toner seal. SEE "5.2.2 Replacing the EP Cartridge".
	Are two or more sheets fed at the same time?	Remove the paper stack and fan it. Then, reload in the paper tray.
	Isn't the EP cartridge degraded or damaged?	Replace with a new EP cartridge. SEE "5.2.2 Replacing the EP Cartridge".
	Is the EP cartridge installed properly?	Install the EP cartridge properly. SEE "5.2.2 Replacing the EP Cartridge".
	The printer may be faulty.	Please contact your Lenovo Customer Service Center.
	Is the toner seal of the EP cartridge pull out?	See "5.2.2 Replacing the EP Cartridge" and pull out the toner seal properly, and install the EP cartridge again.
A completely black page is printed.	Isn't the EP cartridge degraded or damaged?	Replace with a new EP cartridge. SEE "5.2.2 Replacing the EP Cartridge".
	The printer may be faulty.	Please contact your Lenovo Customer Service Center.

3.4.2 Faded, Dirty, Uneven, Wrinkled or Smudged Output

Condition	Verification	Solution
The printed image is faded.	Did you use the recommended paper type?	Replace with paper of the recommended size and type. SEE "2.1 Paper Specifications"
	Is the paper damp?	Replace with new paper stock. SEE "2.2 Loading Paper"
	Isn't the EP cartridge degraded or damaged?	Replace with a new EP cartridge. SEE "5.2.2 Replacing the EP Cartridge"
	Is it time to replace the EP cartridges?	Replace with a new EP cartridge. SEE "5.2.2 Replacing the EP Cartridge"
Black dots or stains are printed.	Did you use the recommended paper type?	Replace with paper of the recommended size and type. SEE "2.1 Paper Specifications"
	Isn't the EP cartridge degraded or damaged?	Replace with a new EP cartridge. SEE "5.2.2 Replacing the EP Cartridge"
Black lines are printed. 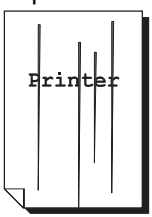	Isn't the EP cartridge degraded or damaged?	Replace with a new EP cartridge. SEE "5.2.2 Replacing the EP Cartridge".
Recurring stains are found.	There may be dirt in the paper path.	Print several sheets to remove the dirt.
	Isn't the EP cartridge degraded or damaged?	Replace with a new EP cartridge. SEE "5.2.2 Replacing the EP Cartridge".

Condition	Verification	Solution
Hair-line marks appeared in or around black half-tone printing. 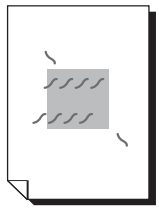	Did you use paper unpacked and left unused for a long period of time (especially when the humidity is low)?	Replace with new paper stock. SEE "2.2 Loading Paper"
Shadows appeared around areas of solid black printing.	Did you use paper unpacked and left unused for a long period of time (especially when the humidity is low)?	Replace with new paper stock. SEE "2.2 Loading Paper"
White dots appeared in areas of solid black printing.	Did you use the recommended paper type?	Replace with paper of the recommended size and type. SEE "2.1 Paper Specifications"
	Isn't the EP cartridge degraded or damaged?	Replace with a new EP cartridge. SEE "5.2.2 Replacing the EP Cartridge"
Poor fusing	Is the paper damp?	Replace with new paper stock. SEE "2.2 Loading Paper"
	Did you use the recommended paper type?	Replace with paper of the recommended size and type. SEE "2.1 Paper Specifications"

Condition	Verification	Solution
Some parts are not printed.	Is the paper damp?	Replace with new paper stock. SEE "2.2 Loading Paper"
	Did you use the recommended paper type?	Replace with paper of the recommended size and type. SEE "2.1 Paper Specifications"
Printing is slanted. Unable to print at a desired position.	Are the guide clips of the paper cassette in the correct positions?	Adjust the vertical and horizontal guide clips of the paper tray to their correct positions. SEE "2.1 Loading Paper"
Vertical blanks are printed. 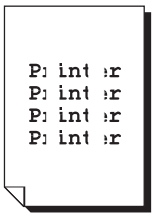	Is the EP cartridge installed properly?	Install EP cartridge properly. SEE "5.2.2 Replacing the EP Cartridge".
	Isn't the EP cartridge degraded or damaged?	Replace with a new EP cartridge. SEE "5.2.2 Replacing the EP Cartridge".
Wrinkled paper 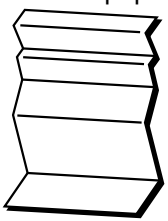	Did you use the recommended paper type?	Replace with paper of the recommended size and type. SEE "2.1 Paper Specifications"
	Is the paper damp?	Replace with new paper stock. SEE "2.2 Loading Paper"
	Is the paper loaded properly?	Load the paper stock properly. SEE "2.2 Loading Paper".

Condition	Verification	Solution
Printing is smudged.	Is the paper damp?	Replace with new paper stock. SEE "2.2 Loading Paper"
	Did you use the recommended paper type?	Replace with paper of the recommended size and type. SEE "2.1 Paper Specifications".

3.4.3 Output is Not Clear

Condition	Verification	Solution
Transparency failed to print clearly.	Is the recommended transparency used?	Load the suitable type of transparency. SEE "2.1 Paper Specifications".
Postcard failed to print clearly.	Is the recommended postcard used?	Load the suitable type of postcard. SEE "2.1 Paper Specifications".
Envelope failed to print clearly.	Is the recommended envelop used?	Load the suitable type of envelop. SEE "2.1 Paper Specifications".

3.5 Other Problems

If abnormal sound is generated, solve the problem by seeing the following table:

Condition	Verification	Solution
Unusual sounds	Is the printer placed on a level surface?	Move the printer on a level and sturdy surface. SEE "Safety Precautions".
	Is the paper tray properly installed?	Push the paper tray firmly into the printer.
	Are there foreign objects such as paper scraps in the printer?	Turn the printer power off and remove these objects from the printer. NOTE If you have difficulties remoing these objects from the printer, contact your Lenovo Customer Service Center.

3.6 State of the LED Indicator

The state of the printer can be found with the LED indicator, which lights up, blinks or turns off. For details, see Appendix C.

Take appropriate action according to the following table.

Printer Status	Red	Green
The switch is on	Blink (one time)	Blink (one time)
Warming up		Blink (one time per 1.6 second)
Ready		Light (at all times)
Printing		Blink (one time per 1 second)
Conserves power		Blink (one time per 3 second)
Error	Blink (one time per 1 second)	
Serious Error	Light (at all times)	

4 Clearing Paper Jams

4.1 When Paper is Jammed 4-2
4.2 Unable to Feed Paper Properly 4-6

4.1 When Paper is Jammed

If paper jam occurs, the printing stops and the LED indicator lights in red color.

■ Location of paper jam

If paper is jammed, remove jammed paper immediately by seeing the following method of solution.

⚠ Caution

- Never touch areas labeled as "High Voltage." You can get an electric shock.
- Never touch a labeled area found on or near the fusing unit. You can get burnt.
  If a sheet of paper is wrapped around the heat roller, do not try to remove it by yourself to avoid injuries or burns. Turn off the printer immediately and contact your Lenovo Customer Service Center.

NOTE

- If a paper jam occurs accompanied by smoke, turn the power OFF without opening the cover. Disconnect the power plug from the wall outlet, and contact your dealer or Lenovo Customer Service Center.
- To remove jammed paper, pull it out slowly by being careful not to tear it.

HINT

- Paper jam may be caused by the installation environment of the printer and/or paper. Install the printer at an appropriate location by seeing "1.1 Checking the Package Contents, Unpacking the Printer." Use appropriate paper by seeing "2.1 Paper Specifications".

4.1.1 Paper Jam at Fusing Unit

If paper jam should occur at the fusing, remove jammed paper by the following procedure:

Steps:

1 With the printer power ON, pull and open fusing unit cover slowly while pressing the left and right front cover release levers.

2 Hold the left and right ends of the top cover and open it slowly.

3 Hold the ends of jammed paper and withdraw slowly.

A. If jammed paper is visible at the following position:

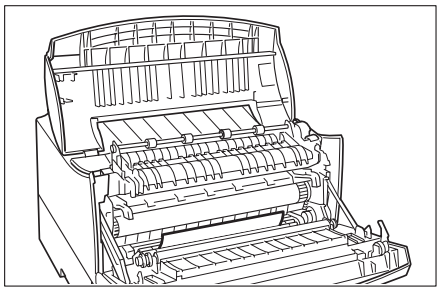

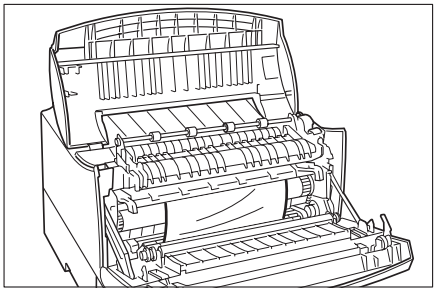

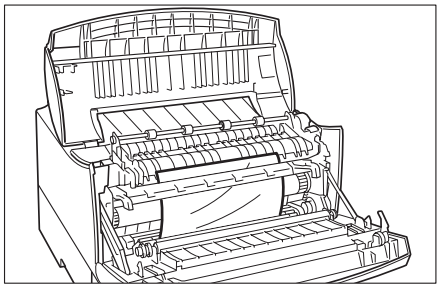

Hold the ends of jammed paper and withdraw slowly.
If paper is not on the roller, hold paper firmly and withdraw slowly.

B. If jammed paper is visible at the following position:

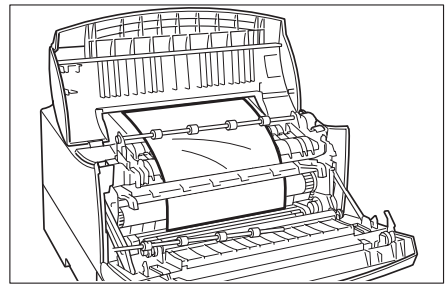

Hold the ends of jammed paper and withdraw slowly toward the output tray.

C If jammed paper is invisible:
Go to Step 6.

4 Slowly close the top cover.

5 Slowly close the front cover.
If jammed paper is removed, the lit or blinking indication is reset and the printing is automatically restarts.

6 Remove the standard or MP tray slowly.

7 Hold the ends of jammed paper and withdraw slowly downward.

HINT Remove jammed paper from the paper tray. Don't load it again to the paper tray. Or the curling of paper may cause another jamming.

8 Replace the removed standard or MP tray to the printer.
If jammed paper is removed, the lit or blinking indication is reset and the printing is automatically restarts.

9 Slowly close the top cover.

10 Slowly close the front cover.
If jammed paper is removed, the lit or blinking indication is reset and the printing is automatically restarts.

4.1.2 Paper Jam in the Paper Tray

If paper jam should occur in the paper tray, remove jammed paper by the following procedure:

Steps:

1 Pull out the paper cassette slowly.

2 Hold the ends of jammed paper and withdraw slowly.
If jammed paper is not found, go to Step 4.

HINT Remove jammed paper from the paper tray. Don't load it again to the paper tray. Or the curling of paper may cause another jamming.

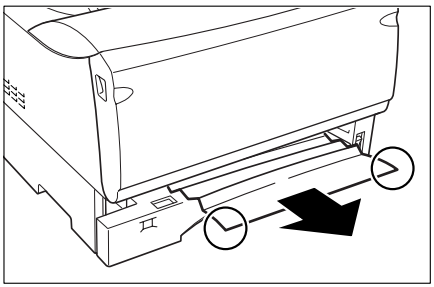

3 Install the removed paper tray to the printer from the front.
If jammed paper is removed, the lit or blinking indication is reset and the printing is automatically restarts.

NOTE The paper tray with paper loaded weighs heavier. Hold it with both hands to install.

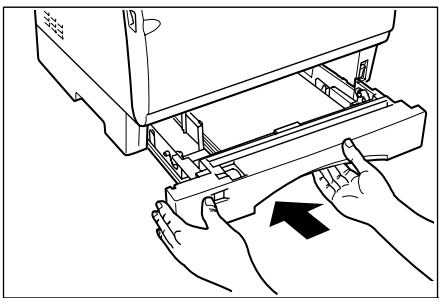

4.2 Unable to Feed Paper Properly

4.2.1 Unable to Feed Paper from the Paper Tray

If the paper tray fails to feed paper to the printer, remove the paper that was not fed by the following procedure:

Steps:

1 Check by the LED indicator located at the right-hand side of the top cover if paper jam has occurred.

2 With the printer power ON, slowly remove the paper tray which jamming has occurred.

NOTE The paper tray with paper loaded weighs heavier. Hold it with both hands to install.

3 Remove paper that failed to be fed.

HINT Remove the paper not fed to the printer from the paper tray. Don't load the removed paper again to the paper tray. Or the curling of paper may cause jamming.

4 Check and see if paper is loaded properly and if right type of paper is loaded to the paper tray.

5 Remove the paper tray cover and check if the end guide and the side guide positions are matched.

HINT For the position of the end guide and the side guides, see "2.2 Loading Paper."

6 Install the paper tray.

NOTE The paper tray with paper loaded weighs heavier. Hold it with both hands to install.

4.2.2 If Paper Jams Frequently

If paper jam occurs frequently, check the following items to prevent recurrence:

- Check Items

  Check the following items after removing jammed paper:

  - Isn't a torn piece of paper left at where the jamming occurred?
  - Is the paper loaded properly?
  - Are the loaded paper size and the setting of the paper size set dial matched?
  - Is paper applicable to this printer being used?
    Observe items described in "2.1 Paper Specifications."
  - Isn't the paper volume in excess?
    Check that paper is set to within the maximum load indication (▽) of the end guide.For information, the maximum sheet accommodation of plain paper having a basis weight of 64.0 g/m2 (ream of 55 kg) is about 250 sheets for main tray and about 30 sheets for an manual feed tray.
  - Isn’t paper already printed being used?
  - Isn’t preprinted paper (printed with ruled lines, etc.) being used?
  - Are the front cover and the top cover properly closed?
  - If installed with the paper tray, are they inserted to the printer straight and fully to the end?
  - Are the positions of the side guides and end guide inside the main tray, manual feed tray matched to the paper size?

5 Consumables

5.1 Introducing Consumables 5-2
5.2 EP Cartridge 5-3

5.1 Introducing Consumables

The following consumables are available for this printer. To place a purchasing order for any consumables, contact your dealer.

■ EP cartridge

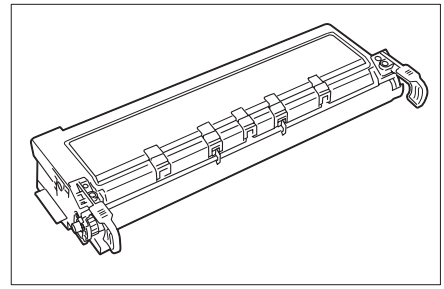

An integral EP cartridge comprising toner for printing, drum, developing unit, etc. Replace this cartridge when the print becomes scratchy or blurred. A supplied EP cartridge or retail EP cartridge can print images to about 2,000/10,000 sheets of A4 size paper respectively.

* Printable page number represents standard page number that can be printed with an EP cartridge (in A4 size paper with image coverage of 5% with the initially set darkness). Number of actually printable page differs by the operating condition of the printer.

NOTE If used with EP cartridge other than recommended by Lenovo, this printer may not produce print quality and performance as originally designed for it. Use the EP cartridge as recommended by us for your printer.

SEE For instructions on how to replace the EP cartridge, see "5.2.2 Replacing the EP Cartridge."

5.2 EP Cartridge

This section describers EP cartridge.

5.2.1 Precautions on Handling the EP Cartridge

Care should be taken for the following points when handling the EP cartridge:

> ⚠ **WARNING**
> Never throw an EP cartridge into an open flame. It can cause an explosion and you can get burnt.

■ Precautions on the handling

- Avoid direct sunlight or intensive light.
- To install the EP cartridge, avoid a place exposed to the strong light. End the work in 5 minutes.
- Don’t touch the drum surface with hand. Don't set the EP cartridge in upright position or upside down, or the drum may be damaged.
- The drum shutter protects the photo sensitive unit (drum) inside from exposure to the lights. Don't open the drum unless necessary.
- Toner is harmless to human bodies. However, if attached to the hand or clothes, wash it away with water immediately.
- Users are recommended to use up an EP cartridge within one year after unpacking.

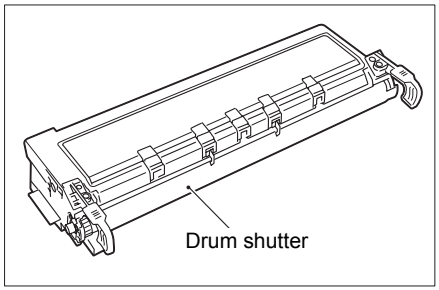

■ Precautions for storage

- Avoid direct sunlight and store in the following environment:
- Temperature range of 0 to 35 ℃ and relative humidity of 15 to 80% (no condensation)
- Avoid storage in a place of high temperature and humidity
- Don't store near the CRT screen, disk drive, floppy disk and other magnetic items.
- Keep out of reach of children.

5.2.2 Replace the EP Cartridge

If the LED indicator indicates that toner is low, the EP cartridge is at the end of its life.
Replace the EP cartridge according to the following procedure:

> ⚠ **WARNING**
> Never throw an EP cartridge into an open flame. It can cause an explosion and you can get burnt.

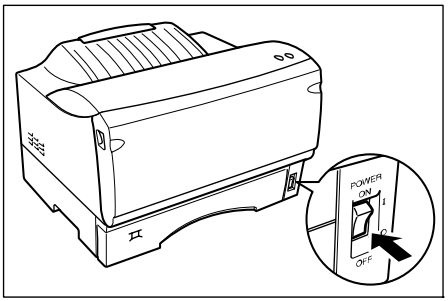

1 Press [O] of the power switch located on the front of the printer to turn the power OFF.

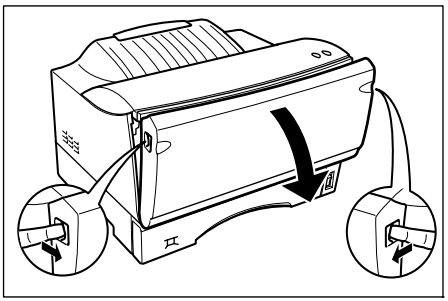

2 Pull and open the front cover slowly while pressing the left and right front cover release levers.

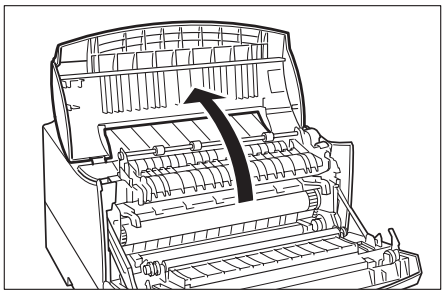

3 Hold the left and right ends of the top cover and open it slowly.

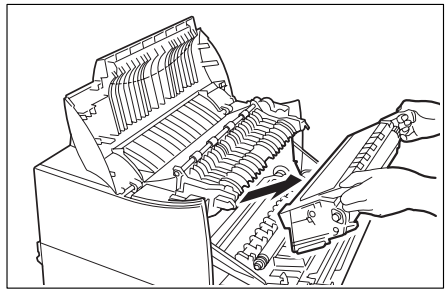

4 Hold the left and right handles as shown in the figure and pull out the used EP cartridge.

HINT Care should be taken not to contaminate hands and clothes with toner. If hands and clothes are contaminated by toner, wash it with water.

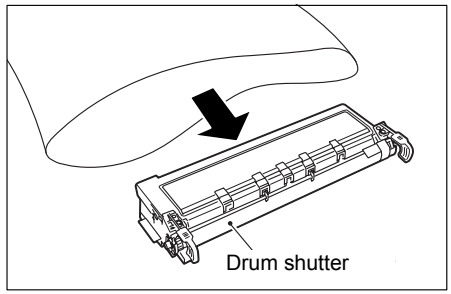

5 Unpack a new EP cartridge.

NOTE Don't touch the OPC drum protection shutter and the toner cartridge.

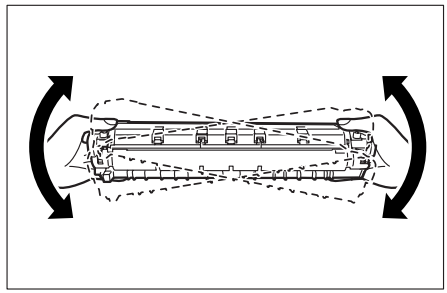

6 To retain toner in evenly distributed state in the cartridge, hold EP cartridge at a level and shake it gently about ten times in the directions shown in the figure.

HINT Don't hold the EP cartridge by the handles. Hold it gently by the ends as shown and shake.

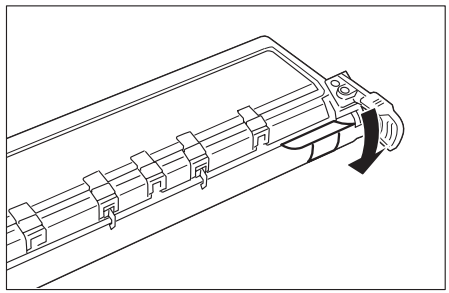

7 Remove the tape (at one location) that keeps the protective shutter in place by pulling it top down.

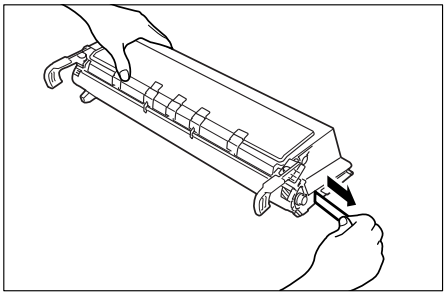

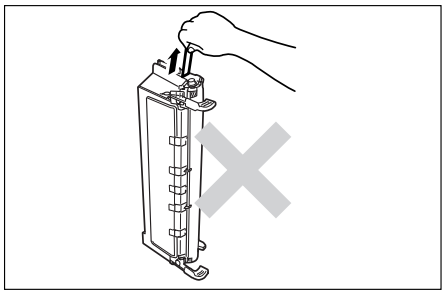

8 Place the EP cartridge on the flat surface with the handles in front. Hold the end of the toner seal and pull it out slowly.

NOTE
- The normally removed toner seal will be approx. 70 cm long. If failed to remove it normally, contact your printer dealer.
- Small amount of toner may scatter when the toner seal is removed. Care should be taken not to contaminate hand and/or clothes. If contaminated by toner, wash the hands and/or clothes with water.
- Don't pull out the toner seal from an EP cartridge held in upright position. Or, the seal may not be entirely removed or torn in the middle.
- Installing such an EP cartridge with the toner seal stuck or torn in the middle may not only degrade print quality but also cause trouble to the printer main unit.

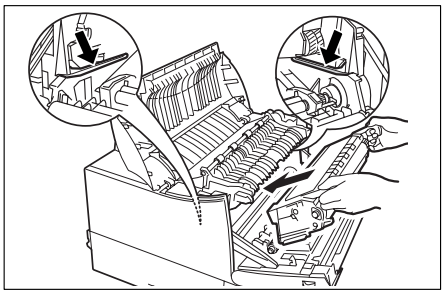

9 Hold a new EP cartridge to the front of the printer by the handles as shown in the figure. Set it to the printer by matching the protrusion on both sides of the EP cartridge to the groove inside the printer. Check that the EP cartridge does not float or is not slanted and set fully to the end.

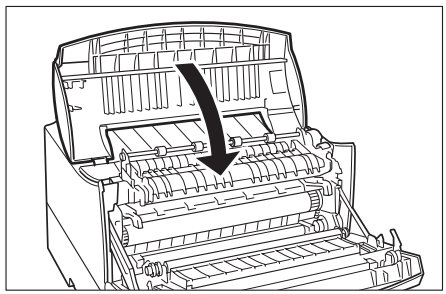

10 Slowly close the top cover.

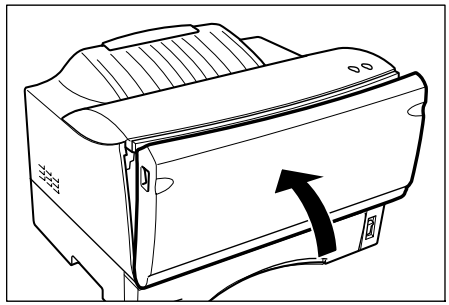

11 Slowly close the front cover.

Push up the front cover slowly until a click is heard and check that the cover is properly closed.

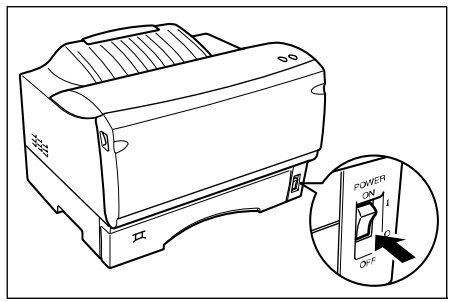

12 Push [I] on the power switch located on the front of the printer to turn the printer power on.

6 Software Supplied with LJ6100

6.1 Overview 6-2
6.2 Installing and Uninstalling LJ6100 Driver 6-4
6.3 Drivers 6-6
6.4 Status Monitor Program 6-14

6.1 Overview

This section outlines the contents and relevant information of the software supplied with LJ6100.

6.1.1 Contents of Supplied CD-ROM

LJ6100 printer has been supplied with a CD-ROM.

The CD-ROM includes LJ6100 printer driver, User Guide (in pdf format) and Quick Setup Guide (in pdf format).

To read these pdf documents, you need the Acrobat reader 5.0 or later.

The printer driver is a software product that converts print data and instructions on the computer to data interpretable for the printer.

6.1.2 Applicable Operating Systems

- LJ6100 provides a printer driver for the following computers (operating systems):
  - Microsoft® Windows® 2000 Professional
  - Microsoft® Windows® XP
  - Microsoft® Windows® Vista
  - Microsoft® Windows® 7

6.1.3 Supported Hardware Interfaces PnP Standards

- LJ6100 supports the following PnP standards:
  - Universal serial bus PnP standard, USB2.0
  - Universal parallel bus PnP standard, IEEE1284

6.1.4 Driver Upgrade

Lenovo will upgrade the printer driver duly to adapt to new version of your Windows OS.

You can obtain the latest information about the printer driver by the following three methods, which are subject to change without prior notice:

- Visit Company Website at: www.Lenovo.com
- Call Lenovo Technical Support Hotline: 4008101234
- Contact your local dealer.

6.2 Installing and Uninstalling LJ6100 Driver

The installer will auto run and auto install the printer driver when you insert the CD-ROM supplied with LJ6100 into your CD-ROM drive under the Windows® system.

6.2.1 Driver Installation Methods

The LJ6100 driver supports the following three installation methods:

- Auto installing from CD-ROM
- Add Printer Wizard
- Installing via USB

We recommend that the non-professional user use the first method to install the printer driver. This manual describes the first method only.

6.2.2 Computer Configuration Requirement

The computer configuration requirements are following when using LJ6100 as a local printer:

Items	Function
CPU	I486DX or later
Model	IBM PC-AT and compatible machine
Memory	64M bytes or more
Interface	Parallel port or USB
Operating System	Windows® 2000 Windows® XP Windows® Vista Windows® 7

6.2.3 Installing the Driver for Parallel

Recommend that use the Auto Installing from CD-ROM for the parallel driver. Please follow the instructions on the screen.

HINT Refer to Section 1.6.2 Installing the Printer Driver for Parallel.

6.2.4 Installing the Driver for USB

The installing steps for USB driver are basically the same as the steps for parallel driver in Windows. Please follow the instructions on the screen.

HINT Refer to Section 1.60.3 Installing the Printer Driver for USB.

6.2.5 Driver Uninstallation

User can uninstall the LJ6100 printer driver in Windows via the following methods:

- Double-click the uninstall icon of Legend LJ6100 item.
- Click **Control Panel**, click **Add or Remove Programs**, and then select the LJ6100 from the program list to uninstall the driver.

6.3 Drivers

The settings options with “*” represent the default setting. Press Default button to reset the current setting to default.

6.3.1 Driver Interface

Click LJ6100 Printer icon and select “Properties” option to enter the driver setting interface.

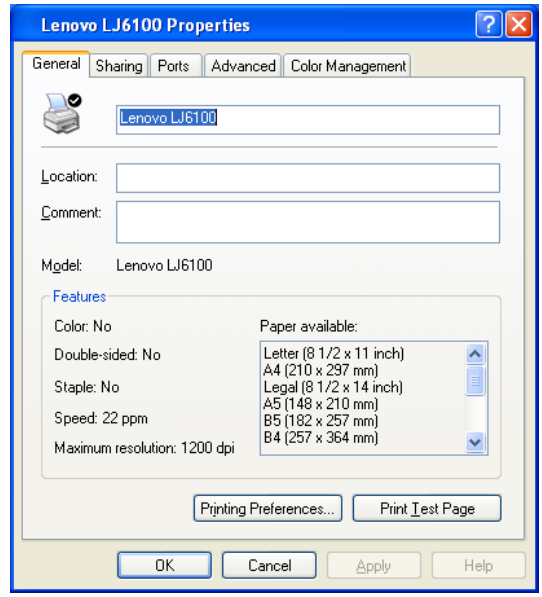

Click the “**Printing Preferences**” button from the General tab, the LJ6100 printer driver screen appears, then you can set them.

The example given in the manual is based on Windows XP. The setting contents of each tab are basically similar in a variety of Windows.

SEE Refer to related Windows manuals.

6.3.2 Setting Driver

Click **Printing Preferences** button:

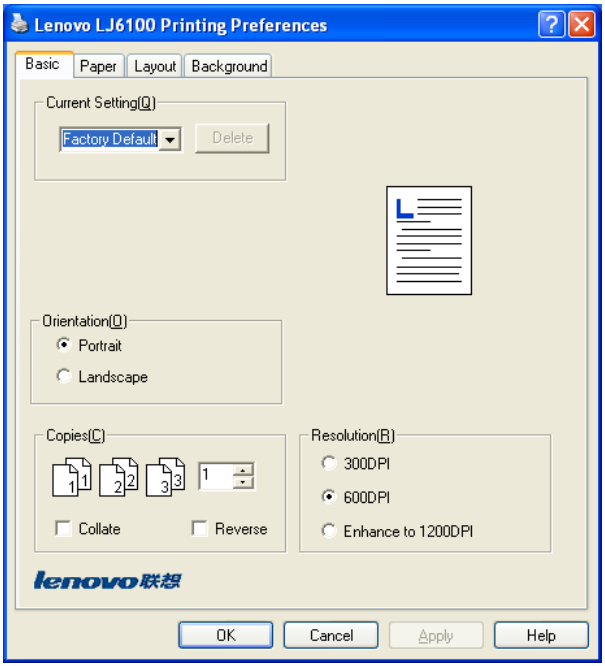

- Basic Setting Tab

Items	Setting Value	Defaults
Orientation	Portrait	✔
	Landscape	
Copies	1 ~ 99	1
Collate		No
Reverse		No
Resolution	300DPI	
	600DPI	✔
	Enhanced to 1200DPI	

- Paper Tab

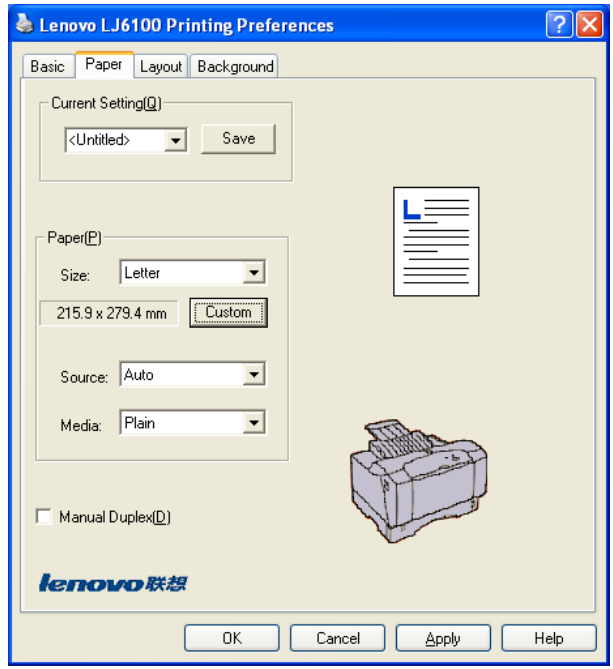

Items	Setting Value	Defaults
Size	Letter (215.9 x 279.4 mm)	✔
	Legal (215.9 x 355.6 mm)	
	A3 (297 x 420 mm)	
	A4 (210 x 297 mm)	✔
	A5 (148.5 x 210 mm)	
	B4 (257 x 364 mm)	
	B5 (182 x 257 mm)	
	Postcard (100 x 148 mm)	
	Postcard #2 (148 x 200 mm)	
	Envelope (105 x 235 mm)	

Items	Setting Value	Defaults
	8 Kai (270x390mm)	
	16 Kai (195 x 270mm)	
	32 Kai (135 x 195mm)	
	Custom	
Custom		
Media	Plain	✔
	Thick	
	Transparency	
	Cardstock	
	Rough	
Source	Auto	✔
	Manual Feed Tray	
	Main Tray	
Manual Duplex		NO

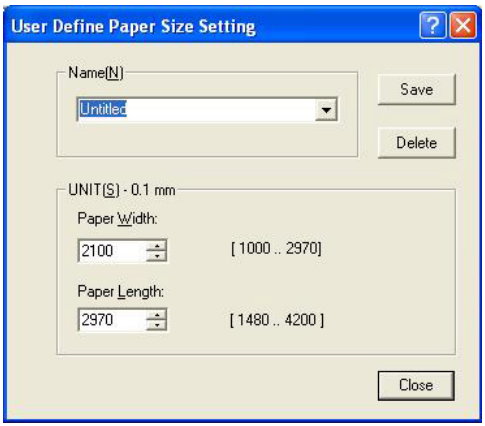

- Layout Tab

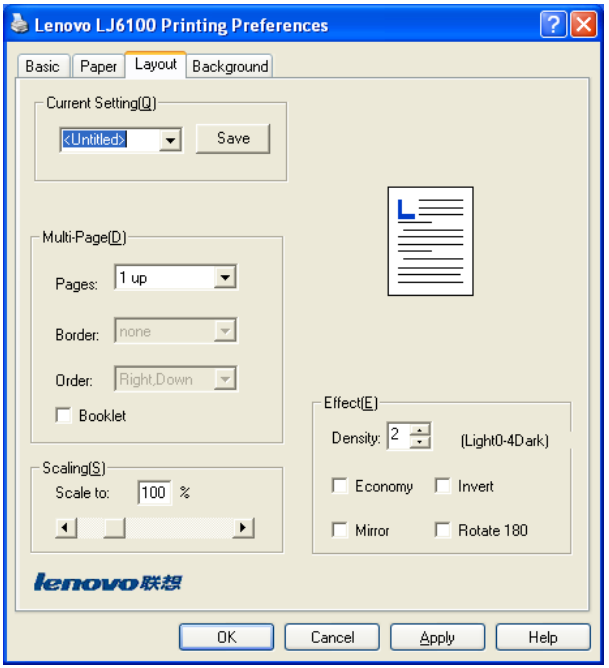

Items	Setting Value	Defaults
Pages	1up	✔
	2up	
	4up	
	9up	
	2x2 Poster	
Border	None	✔
	Solid	
	Dashe	
Order	Right Down	✔
	Down Right	
	Left Down	
	Down Left	

Items	Setting Value	Defaults
Booklet		NO
Scaling	25-400	100
Density	0~4	2
Invert		NO
Economy		NO
Mirror		NO
Rotate 180		NO

- Background Tab

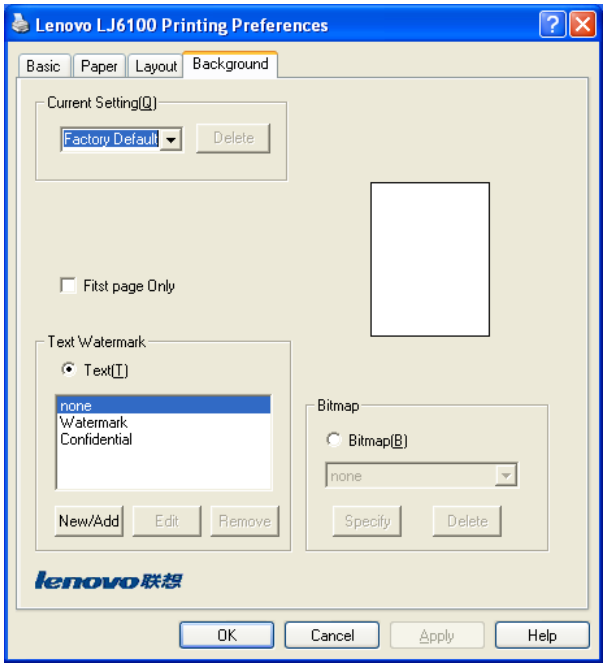

Items	Setting Value	Defaults
First page only		No
Text Watermark		✔
Text		
New/Add		
Edit		
Remove		
Bitmap		
Bitmap		
Specify		
Delete		

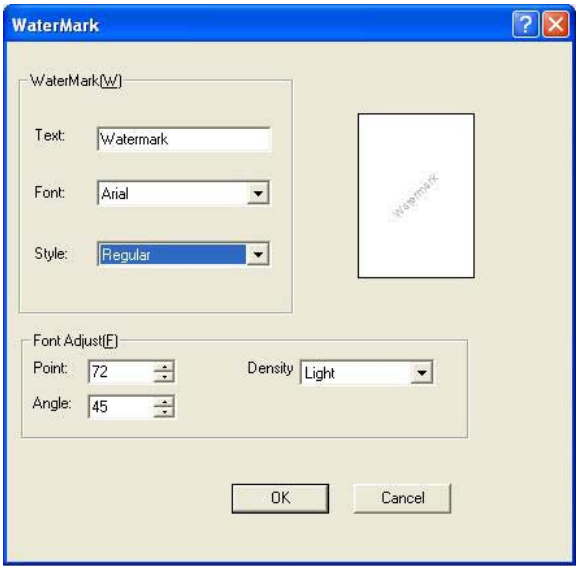

Items	Setting Value	Defaults
Text		Watermark
Font		Arial
Style	Regular	✔
	Bold	
	Italic	
	Bold, italic	
Dimensions	12 ~ 288	72
Angle	0 ~ 360	45
Density	Lightest	
	Light	✔
	General	
	Heavy	
	Heaviest	
OK		
Cancel		

6.4 Status Monitor Program

The status monitor program can be installed automatically during the printer driver installation.

6.4.1 Status Monitor Interface

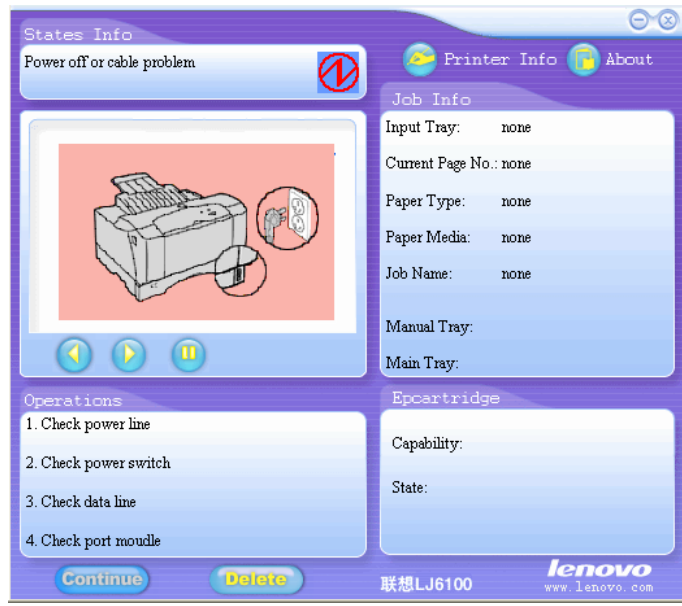

Display States Info, Animation, Operations, Job Info and EP cartridge.
You can obtain the information about your printer easily.

- States Info: display the current printer status in text format.
- Animation: demonstrate the next operation in image format.
- Job Info: display the job status in text format.
- EP cartridge: display the related information of the consumables in text format.

A Appendixes

A.1 General Specifications A-2
A.2 Life Span of Consumables A-4
A.3 Life Span of Consumables A-5

A.1 General Specifications

Product Name	LJ6100
Product Type	A3 Size Laser Printer
Printing Method	Laser electrostatic imaging system
Rated Power	AC 220-240V 50/60 Hz 3.6A
Rated Power Consumption	470 W, less than 12 W at power saver mode.
Noise Level	Operating: 50db(A); Standby: <360db(A)
First-Print-Out Time	< 9.5 seconds (A4)
Resolution	300/600dpi/Enhanced 1200dpi (optional)
Print Speed	21 ppm (A4 for continuous printing of the same document, landscape)
Memory	Standard 32M
Controller	GDI
Operating System	WIN2000/XP/Vista/7
Consumable	EP cartridge in one unit; supplied cartridge: lifespan is 2,000 pages; retail cartridge: lifespan is 10,000pages
Main Feature	Manual Duplex Print, Reverse Print, Watermark Print, N in 1 Print, Booklet Print, Scaling, Custom Paper Size and Error Message (Animation)
Paper Size	A3, A4, A5, B4, B5, Legal, Letter, Postcard, Envelope, 8 Kai, 16 Kai, 32 Kai and Custom. Where, the width of custom paper is from 100 to 297mm, and the length is from 148 to 420mm.
Supported Media Type	Plain paper, Thick Paper, Transparency, Cardstock and Vellum
Interface Type	IEEE1284 parallel port / USB 1.1 port
Operating Environment (For guaranteed image quality)	Temperature: 5-35°C Humidity: 15-85% (no condensation)
Dimensions (WxDxH)	459 x 463* x 295 mm * With the main tray retracted.
Weight	20kg (with the paper tray)

Printable Area

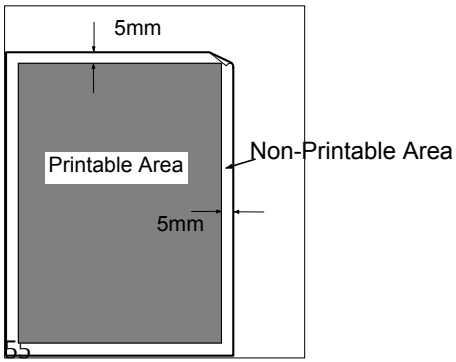

A.2 Life Span of Consumables

Life span of consumables (in number of printable pages):

Consumables	Number of printable pages*
EP cartridge LD1060	About 10,000 pages

* The life value represents the number of printed pages produced when the following conditions are met: A4 paper size and print coverage of 5 %.
* The actual number of printable pages depends on the content of printed material, the paper size, and the operating environment.
* Life of host EP cassette: 2,000 pages.

A.3 Contact Us

Thank you for using the Lenovo product.

Lenovo promises to offer the following services for this product:

- The latest upgrade version for software
- Recommended applications
- Restrictions for applications

You may get the latest information of this product by the following approaches:

- Company Website: http://www.lenovo.com
- Dealer

Lenovo (Beijing)Limited
Address: No.6 Chuang Ye Road Shangdi Information Industry Base,
Haidian District,Beijing,China
Post Code:100085
Website:www.lenovo.com
Version:1.0

联想（北京）有限公司
公司地址：北京市海淀区上地信息产业基地创业路6号
邮政编码：100085
网址：www.lenovo.com
版本：1.0

Copyright © (2009) Lenovo (Beijing) Limited
版权所有 © (2009) 联想 (北京) 有限公司