lenovo

CS2010DW

Operating Instructions

For safe and correct use, be sure to read "Safety Information" before using the machine.

TABLE OF CONTENTS

How to Read This Manual 6
Introduction 6
Legal Prohibition 6
Disclaimer 6
Note to Administrator 7
About IP Address 7

1. Getting Started

Guide to Components 9
Exterior: Front View 9
Exterior: Rear View 11
Interior 12
Control Panel 13
Installing the Machine 15
Where to Put the Machine 15
Installing Option 18
Attaching Paper Feed Unit 18
About Operation Tools 21
Configuring Network Settings 22
Configuring the IP Address Settings 22
Sharing the Printer on a Network 26
Wireless LAN Setup 27
Restricting Machine Functions According to User 30
Enabling the User Restriction Settings 30
When Machine Functions are Restricted 33

2. Loading Paper

Supported Paper 35
Specifications of Paper Types 38
Non-Recommended Paper Types 45
Print Area 46
Loading Paper 48
Loading Paper into Tray 1 and 2 48
Loading Paper into Bypass Tray 52
Loading Envelopes 53

Specifying Paper Type and Paper Size Using Control Panel....55

3. Printing Documents

Basic Operation....59
Canceling a Print Job....59
If a Paper Mismatch Occurs....61
Continuing Printing Using Mismatched Paper....61
Resetting the Print Job....61
Printing Confidential Documents....62
Storing a Locked Print file....62
Printing a Locked Print file....63
Deleting a Locked Print file....64
Checking which Locked Print File Jobs Have Been Canceled....64
Direct Printing from a Digital Camera (PictBridge)....66
What Is PictBridge?....66
PictBridge Printing....66
What Can Be Done on this Machine....67
Exiting PictBridge....67
When PictBridge Printing Does Not Work....68
Using Various Print Functions....70
Print Quality Functions....70
Print Output Functions....71

4. Configuring the Machine Using the Control Panel

Basic Operation....73
Menu Chart....74
System Settings....75
Tray Paper Settings....79
Printing Lists/Reports....82
Printing the Maintenance Page....82
Types of Lists/Reports....82
Printer Features Settings....83
Network Settings....87
Administrator Settings....91

5. Configuring the Machine Using Web Image Monitor

Using Web Image Monitor..... 93

Displaying Top Page..... 94

Changing the Interface Language..... 95

Checking the System Information..... 96

Status Tab..... 96

Counter Tab..... 97

Machine Information Tab..... 99

Configuring the System Settings..... 100

Tray Paper Settings Tab..... 100

I/O Timeout Tab..... 103

Black-and-White Print Priority Tab..... 103

Restricting Machine Functions According to User..... 104

Configuring the Network Settings..... 105

Network Status Tab..... 105

IPv6 Configuration Tab..... 106

Network Application Tab..... 106

DNS Tab..... 107

Auto E-mail Notification Tab..... 108

SNMP Tab..... 109

SMTP Tab..... 110

POP3 Tab..... 110

Wireless Tab..... 111

Configuring the IPsec Settings..... 113

IPsec Global Settings Tab..... 113

IPsec Policy List Tab..... 113

Printing Lists/Reports..... 117

Configuring the Administrator Settings..... 118

Administrator Tab..... 118

Reset Settings Tab..... 118

Backup Setting Tab..... 118

Restore Setting Tab..... 119

Energy Saver Mode Tab..... 120

6. Maintaining the Machine

Replacing the Print Cartridge....121
Replacing the Waste Toner Bottle....126
Replacing a Component....132
Replacing the Intermediate Transfer Unit....132
Replacing the Fusing Unit and Transfer Roller....132
Cautions When Cleaning....133
Cleaning the Toner Density Sensor....134
Cleaning the Friction Pad and Paper Feed Roller....136
Cleaning the Registration Roller and Paper Tray....139

7. Troubleshooting

Removing Paper Jams....143
Removing Printing Jams....143
Common Problems....150
Paper Feed Problems....152
Print Quality Problems....155
Checking the Condition of the Machine....155
Checking the printer driver settings....156
Printer Problems....158
When You Cannot Print Properly....158
When You Cannot Print Clearly....162
When Paper Is Not Fed Properly....165
Other Printing Problems....166
Error and Status Messages on the Screen....167

8. Appendix

Functions and Network Settings Available in an IPv6 Environment....171
Available Functions....171
Transmission Using IPsec....172
Encryption and Authentication by IPsec....172
Security Association....173
Encryption Key Exchange Settings Configuration Flow....173
Specifying Encryption Key Exchange Settings....174
Specifying IPsec Settings on the Computer....175

Enabling and Disabling IPsec Using the Control Panel.....177
Notes About the Toner.....178
Moving and Transporting the Machine.....179
Disposal.....179
Where to Inquire.....180
Consumables.....181
Print Cartridge.....181
Waste Toner Bottle.....182
Specifications of the Machine.....183
General Function Specifications.....183
Printer Function Specifications.....185
Specifications of Options.....186
Paper Feed Unit.....186
Copyright Information about Installed Applications.....187
expat.....187
Iperf.....187
WPA Supplicant.....188
Trademarks.....190
INDEX.....193

How to Read This Manual

Introduction

This manual contains detailed instructions and notes on the operation and use of this machine. For your safety and benefit, read this manual carefully before using the machine. Keep this manual in a handy place for quick reference.

Legal Prohibition

Do not copy or print any item for which reproduction is prohibited by law.

Copying or printing the following items is generally prohibited by local law:

bank notes, revenue stamps, bonds, stock certificates, bank drafts, checks, passports, driver's licenses.

The preceding list is meant as a guide only and is not inclusive. We assume no responsibility for its completeness or accuracy. If you have any questions concerning the legality of copying or printing certain items, consult with your legal advisor.

Disclaimer

Contents of this manual are subject to change without prior notice. In no event will the company be liable for direct, indirect, special, incidental, or consequential damages as a result of handling or operating the machine.

To the maximum extent permitted by applicable laws, in no event will the manufacturer be liable for any damages whatsoever arising out of failures of this machine, losses of the registered data, or the use or non-use of this product and operation manuals provided with it.

Make sure that you always copy or have backups of the data registered in this machine. Documents or data might be erased due to your operational errors or malfunctions of the machine.

In no event will the manufacturer be responsible for any documents created by you using this machine or any results from the data executed by you.

For good output quality, the manufacturer recommends that you use genuine toner from the manufacturer.

The manufacturer shall not be responsible for any damage or expense that might result from the use of parts other than genuine parts from the manufacturer with your office products.

Two kinds of size notation are employed in this manual.

Some illustrations or explanations in this guide may differ from your product due to improvement or change in the product.

Note to Administrator

Password

Certain configurations of this machine can be password-protected to prevent unauthorized modifications by others. We strongly recommend you to create your own password immediately.

The following are the operations that can be password-protected:

- Configuring the [Network Settings] or [Admin. Tools] menu using the control panel

  You can access these menus without a password by factory default.

  The setting for creating a password can be found in [Admin. Tools].

- Configuring the [System Settings], [Restrict Available Functions], [Network Settings], [IPsec Settings], or [Administrator Tools] menu using Web Image Monitor

  By default, the access to the machine via Web Image Monitor is not password-protected.

  The setting for configuring the password can be found in [Administrator Settings].

Note

- For details about creating passwords, see page 91 "Administrator Settings" or page 118 "Configuring the Administrator Settings".

User Restriction

You can restrict the use of certain functions of this machine to users with proper authentication.

Using Web Image Monitor, you can select the functions you want to restrict, and register the users who can use that function upon authentication.

Note

- For details about creating passwords and configuring the user restriction settings, see page 30 "Restricting Machine Functions According to User".

About IP Address

In this manual, "IP address" covers both IPv4 and IPv6 environments. Read the instructions that are relevant to the environment you are using.

1. Getting Started

Guide to Components

This section introduces the names of the various parts on the front and rear side of the machine and outlines their functions.

Exterior: Front View

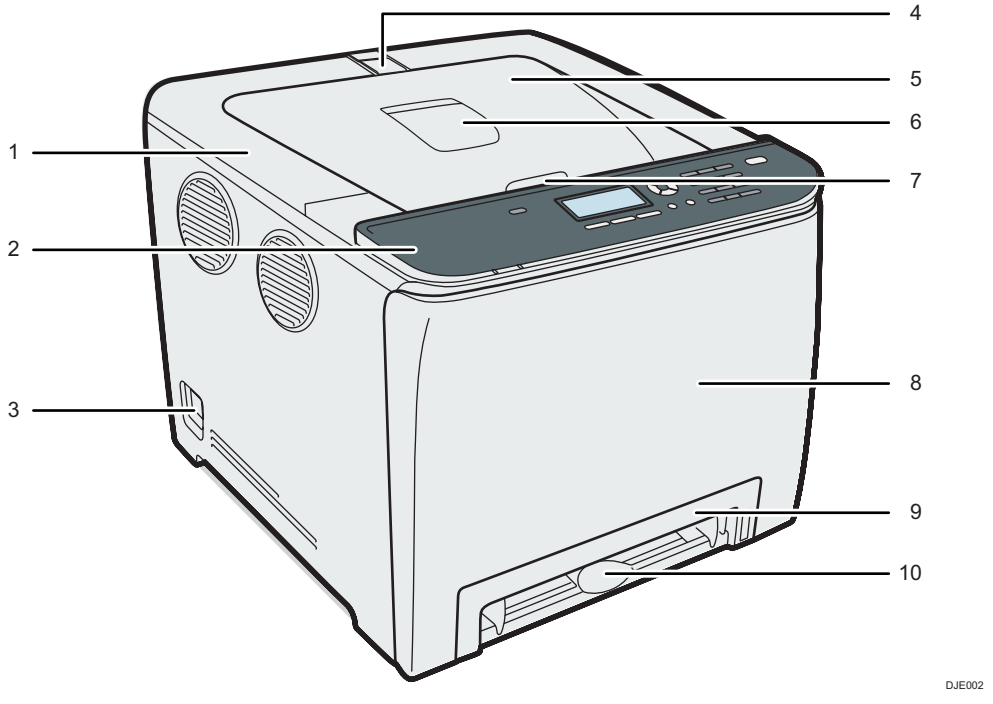

1. **Top Cover**

   Open this cover to replace the print cartridge.

2. **Control Panel**

   Contains a screen and keys for machine control.

3. **Power Switch**

   Use this switch to turn the power on and off.

4. **Stop Fences**

   Pull up this fence to prevent paper falling off when printing a large amount of paper at a time. The fence can be adjusted at the A4/Letter or Legal size position.

5. **Standard Tray**

   Delivered sheets are stacked here with the print side down.

6. **Standard Tray Extension**

   Use this to support sheets that come out curled after they are printed.

   Flip open the extension by pushing down on the end that is toward the rear of the machine.

7. **Top Cover Open Lever**

   Open here to replace the print cartridges.

8. **Front Cover**

   Open this cover to replace the waste toner bottle or remove jammed paper.

9. **Tray 1**

   This tray can hold up to 250 sheets of plain paper.

10. **Bypass Tray**

    Load paper here sheet by sheet.

Note

- Pull up the retainer as shown below to prevent A4- or Letter-size prints from falling off.

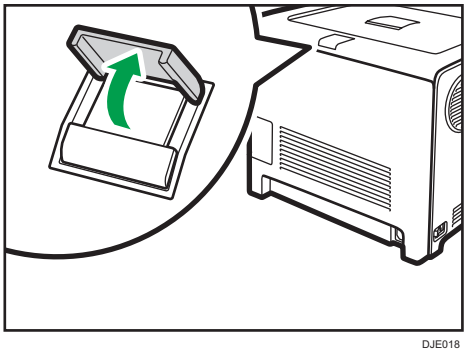

DJE018

- Pull up the retainer as shown below to prevent Legal-size prints from falling off.

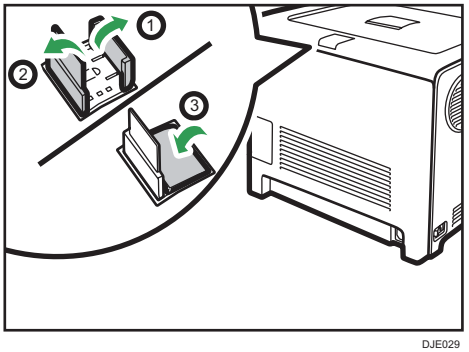

DJE029

Exterior: Rear View

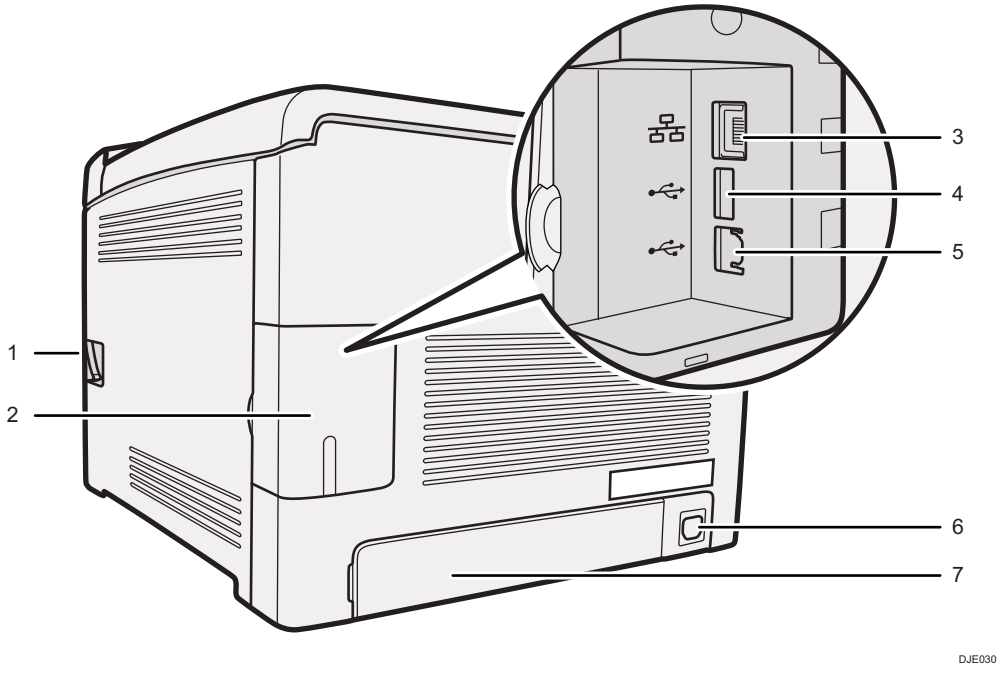

1. **Front Cover Open Lever**

   To open the front cover, pull this lever on the right side of the machine.

2. **Cable Cover**

   Remove this cover when connecting cables to the machine.

3. **Ethernet Port**

   For connecting the machine to the network using a network interface cable.

4. **USB Host Interface**

   Use a USB cable to connect the digital camera to the machine. You can print images directly from a digital camera, without having to connect to a computer.

5. **USB Port**

   For connecting the machine to a computer using a USB cable.

6. **Power Socket**

   For connecting the power cord to the machine.

7. **Rear Cover**

   Remove this cover when loading paper longer than A4 in Tray 1.

Interior

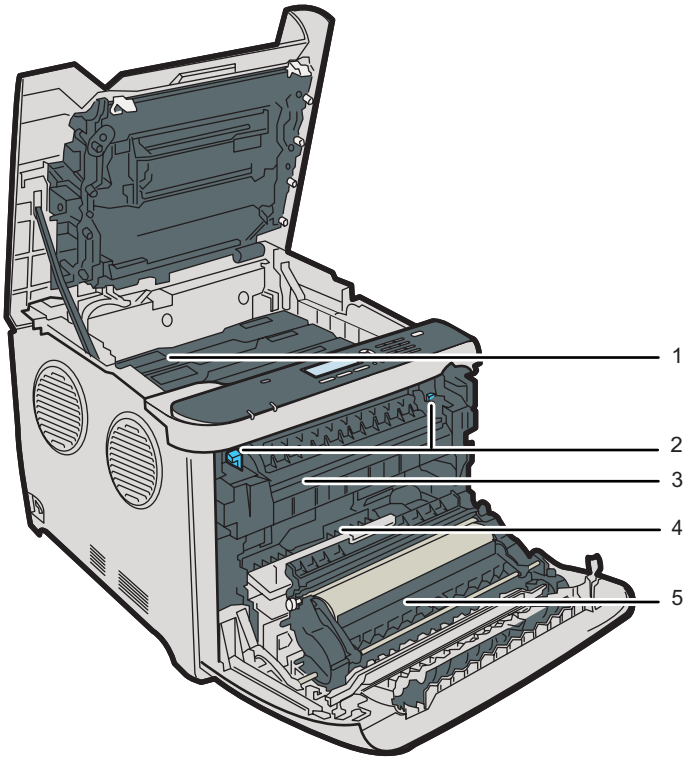

1. **Print Cartridges**

   Install the print cartridges from the machine rear, in the order of cyan (C), magenta (M), yellow (Y), and black (K). Messages appear on the screen when print cartridges need to be replaced, or new ones need to be prepared.

2. **Fusing Unit Lever**

   Lower both the left and right levers when you print on an envelope.

3. **Fusing Unit**

   Fuses toner to the paper.

   You might have to move this unit to check for or remove jammed paper.

4. **Waste Toner Bottle**

   Collects toner that is wasted during printing.

5. **Transfer unit**

   You need to remove this when you replace the waste toner bottle.

Note

- For details about the messages that appear on the screen when consumables need to be replaced, see page 167 "Error and Status Messages on the Screen".

Control Panel

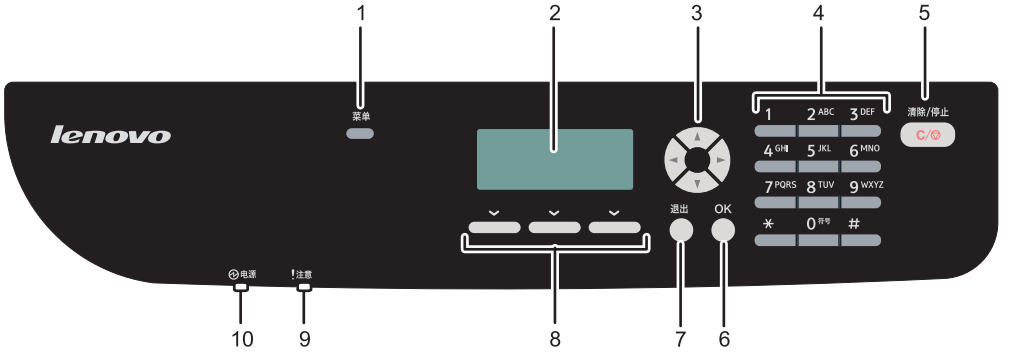

DJE103

1. **[菜单] key**

   Press to display the menu for configuring the machine's system settings.

2. **Display**

   Displays the current status and messages.

3. **Scroll Keys**

   Press to move the cursor in the directions indicated by each scroll key.

4. **Number keys**

   Use to enter numerical values.

5. **[清除/停止] key**

   - While the machine is processing a job: press to cancel the current job.
   - While configuring the machine settings: press to cancel the current setting and return to standby mode.

6. **[OK] key**

   Press to confirm settings or enter the next level of the menu tree.

7. **[退出] key**

   Press to cancel the last operation or exit to the previous level of the menu tree.

8. **Selection keys**

   Press the key that corresponds to an item shown on the bottom line of the screen to select it.

9. **Alert Indicator**

   Flashes yellow when the machine will require maintenance soon (such as replacing consumables), or lights up red when a machine error occurs.

   When an alert is issued, check the messages on the screen. For details about the messages that appear on the screen, page 167 "Error and Status Messages on the Screen".

10. **Power Indicator**

    Remains lit while the power is on. It is unlit when the power is off.

Note

- The backlight of the screen is turned off when the machine is in Energy Saver mode.

Installing the Machine

Where to Put the Machine

Be careful about where to place the machine, because environmental conditions greatly affect its performance.

⚠WARNING

- Do not use flammable sprays or solvents in the vicinity of this machine. Also, avoid placing these items in the vicinity of this machine. Doing so could result in fire or electric shock.

- Do not place vases, plant pots, cups, toiletries, medicines, small metal objects, or containers holding water or any other liquids, on or close to this machine. Fire or electric shock could result from spillage or if such objects or substances fall inside this machine.

⚠CAUTION

- Keep the machine away from humidity and dust. Otherwise a fire or an electric shock might occur.

- Do not place the machine on an unstable or tilted surface. If it topples over, an injury might occur.

- Do not place heavy objects on the machine. Doing so can cause the machine to topple over, possibly resulting in injury.

- Keep the machine in an area that is within optimum environmental conditions. Operating the machine in an environment that is outside the recommended ranges of humidity and temperature can cause an electrical fire hazard. Keep the area around the socket free of dust. Accumulated dust can become an electrical fire hazard.

- Make sure the room where you are using the machine is well ventilated and spacious. Good ventilation is especially important when the machine is used heavily.

- Do not obstruct the machine's vents. Doing so risks fire caused by overheated internal components.

Important

- **Keep the machine away from salt-bearing air and corrosive gases. Also, do not install the machine in places where chemical reactions are likely (laboratories, etc.), as doing so will cause the machine to malfunction.**

Space Required for Installation

The recommended (or minimum) space requirements are as follows:

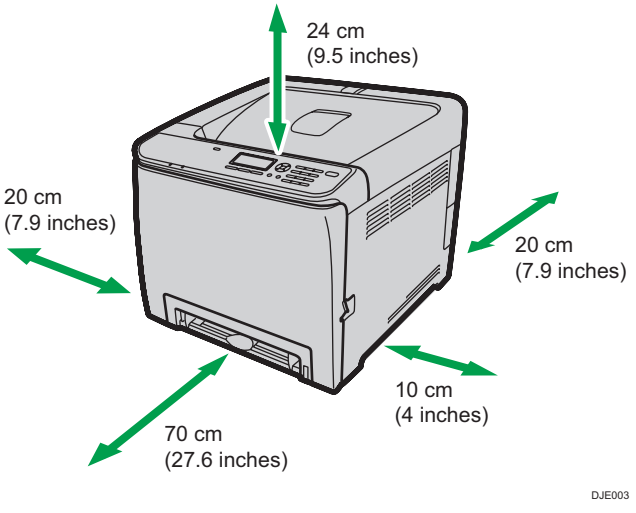

Optimum Environmental Conditions

Permissible and recommended temperature and humidity ranges are as follows:

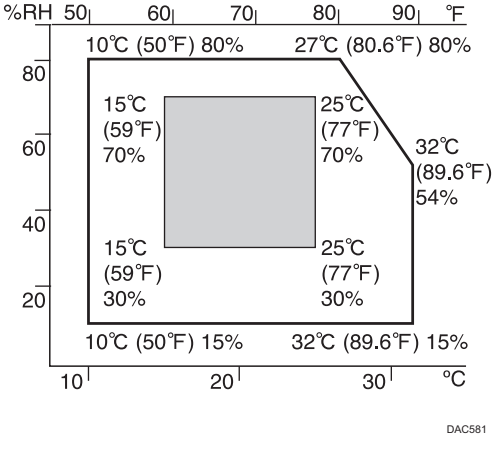

- White area: Permissible Range
- Gray area: Recommended Range

To avoid possible build-up of ozone, locate this machine in large well ventilated room that has an air turnover of more than 30m^3/hr/person.

Environments to Avoid

Important

- **Areas exposed to direct sunlight or strong light**

- Dusty areas
- Areas with corrosive gases
- Areas that are excessively cold, hot, or humid
- Areas directly exposed to currents of hot, cold, or room-temperature air from air conditioners
- Areas directly exposed to radiant heat from heaters
- Locations near air conditioners or humidifiers
- Locations near other electronic equipment
- Locations subject to frequent strong vibration

Ventilation

When you use this machine in a confined space without good ventilation for a long time or print large quantities, you might detect an odd smell.

This might cause the output paper to also have an odd smell.

When you detect an odd smell, regularly ventilate in order to keep the workplace comfortable.

- Set up the machine so that it does not directly ventilate towards people.
- Ventilation should be more than 30 m^3/hr/person.

New machine smell

When a machine is new, it might have a unique smell. This smell will subside in about one week.

When you detect an odd smell, sufficiently ventilate and circulate the air in the room.

Power requirements

- 220 - 240 V, 6 A, 50/60 Hz

Please be sure to connect the power cord to a power source as above.

Installing Option

This section explains how to install options.

Attaching Paper Feed Unit

⚠WARNING

- Touching the prongs of the power cable's plug with anything metallic constitutes a fire and electric shock hazard.

- It is dangerous to handle the power cord plug with wet hands. Doing so could result in electric shock.

⚠CAUTION

- Before installing or removing options, always disconnect the power cord plugs from the wall outlet and allow time for the main unit to fully cool. Failing to take these precautions could result in burns.

- The machine weighs approximately 24 kg (53 lb.). When moving the machine, use the inset grips on both sides, and lift slowly in pairs. The machine will break or cause injury if dropped.
- Lifting the paper feed unit carelessly or dropping may cause injury.
- Before moving the machine, unplug the power cord from the wall outlet. If the cord is unplugged abruptly, it could become damaged. Damaged plugs or cords can cause an electrical or fire hazard.

Important

- Tray 1 is required to print using the optional paper feed unit. Without Tray 1, paper jams will occur.
- The machine must be lifted by two people.
- Do not hold the tray to lift the machine.

1. Check that the package contains the paper feed unit.

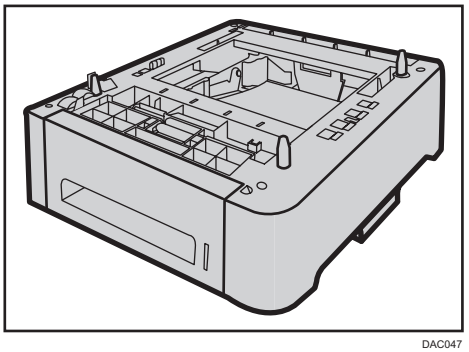

DAC047

2. Turn off the machine's power switch, and then unplug the machine's power cord from the wall outlet.
3. Remove adhesive tapes from the optional paper feed unit.

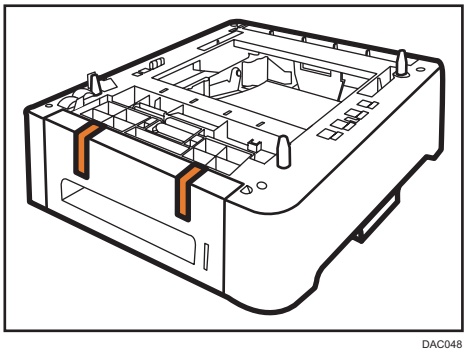

DAC048

4. Lift the machine using the inset grips on both sides of the machine.

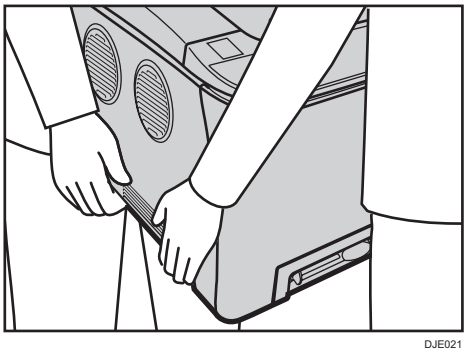

DJE021

5. **There are three upright pins on the optional paper feed unit. Align them with the holes on the underside of the machine, and then carefully lower the machine.**

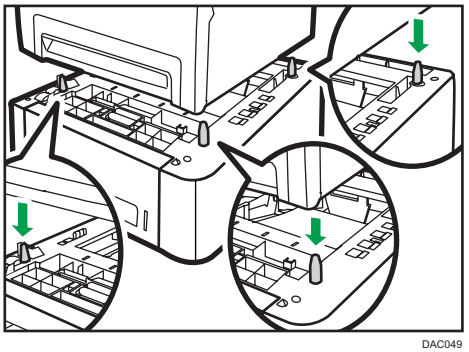

DAC049

6. **After installing the optional paper feed unit, print the configuration page to check the device configuration.**

   If it is installed properly, "Tray 2" will appear under "Paper Input" on the configuration page.

Note

- If Paper feed unit is attached, "Tray 2" appears on the machine's control panel.
- After installing the optional paper feed unit, select Tray 2 in the printer driver. For details, see the printer driver Help.
- If the new device is listed in the column of configuration options, it has been properly installed.
- If the optional paper feed unit is not installed properly, try to install it again by repeating the procedure. If the problem persists, contact your sales or service representative.
- For details about printing the configuration page, see page 117 "Printing Lists/Reports".

About Operation Tools

This section explains the operation tools of this machine.

Control Panel

The control panel contains a screen and keys for controlling the machine. Using the control panel, you can configure the machine's various settings. For details about how to use the control panel, see page 73 "Configuring the Machine Using the Control Panel".

Web Image Monitor

You can check the machine's status and configure its settings by accessing the machine via Web Image Monitor. For details about how to use Web Image Monitor, see page 93 "Configuring the Machine Using Web Image Monitor".

Configuring Network Settings

This section describes configuring the settings required to use the machine on a network.

Configuring the IP Address Settings

The procedure for configuring network settings differs depending on whether the IP address is assigned automatically by the network (DHCP), is specified manually.

Note

- The password for accessing the [Admin. Tools] menu can be specified in [Admin. Tools Lock].
- If your network environment requires a specific transmission speed that is not automatically detected, specify the transmission speed in [Set Ethernet Speed] under [Network Settings].
- First configure the IP address setting, then install the driver. For details about installing the driver, see the Driver Installation Guide.
- For details about printing the configuration page, see page 117 "Printing Lists/Reports".

Specifying settings to receive an IPv4 address automatically

Important

- A DHCP server is required on the network for the machine to receive an IPv4 address automatically.

1. Turn on the machine.
2. Press the [菜单] key.

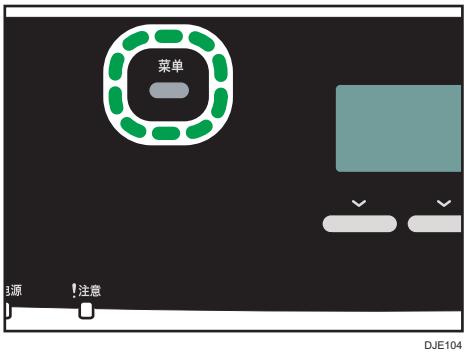

DJE104

3. Press the [▲] or [▼] key to select [Network Settings], and then press the [OK] key.
4. If you are requested to enter a password, enter the password using the number keys, and then press the [OK] key.
5. Press the [▲] or [▼] key to select [IPv4 Configuration], and then press the [OK] key.

6. Press the [▲] or [▼] key to select [DHCP], and then press the [OK] key.
7. Press the [▲] or [▼] key to select [Active], and then press the [OK] key.
8. Press the [菜单] key to return to the initial screen.
9. If you are requested to restart the machine, turn off the machine, and then turn it back on.
10. Print the configuration page to check the setting.

    The IPv4 address setting will appear under "Host Interface" on the configuration page.

Assigning the machine's IPv4 address manually

Important

- The IPv4 address assigned to the machine must not be used by any other device on the same network.

1. Turn on the machine.
2. Press the [菜单] key.

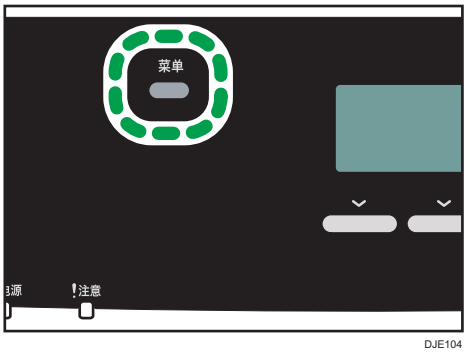

DJE104

3. Press the [▲] or [▼] key to select [Network Settings], and then press the [OK] key.
4. If you are requested to enter a password, enter the password using the number keys, and then press the [OK] key.
5. Press the [▲] or [▼] key to select [IPv4 Configuration], and then press the [OK] key.
6. Press the [▲] or [▼] key to select [DHCP], and then press the [OK] key.
7. Press the [▲] or [▼] key to select [Inactive], and then press the [OK] key.
8. Press the [▲] or [▼] key to select [IP Address], and then press the [OK] key.

   The current IPv4 address is shown.
9. Enter the machine's IPv4 address using the number keys, and then press the [OK] key.

   Press the [◀] and [▶] keys to move between fields.
10. Press the [▲] or [▼] key to select [Subnet Mask], and then press the [OK] key.

    The current subnet mask is shown.

11. **Enter the subnet mask using the number keys, and then press the [OK] key.**

    Press the [◀] and [▶] keys to move between fields.

12. **Press the [▲] or [▼] key to select [Gateway Address], and then press the [OK] key.**

    The current gateway address is shown.

13. **Enter the gateway address using the number keys, and then press the [OK] key.**

    Press the [◀] and [▶] keys to move between fields.

14. **Press the [菜单] key to return to the initial screen.**
15. **If you are requested to restart the machine, turn off the machine, and then turn it back on.**
16. **Print the configuration page to check the setting.**

    The IPv4 address setting will appear under "Host Interface" on the configuration page.

Note

- If [DHCP] is enabled, manually configured IPv4 address settings are not used.

Specifying settings to receive an IPv6 address automatically

Important

- A DHCP server is required on the network for the machine to receive an IPv6 address automatically.

1. **Turn on the machine.**
2. **Press the [菜单] key.**

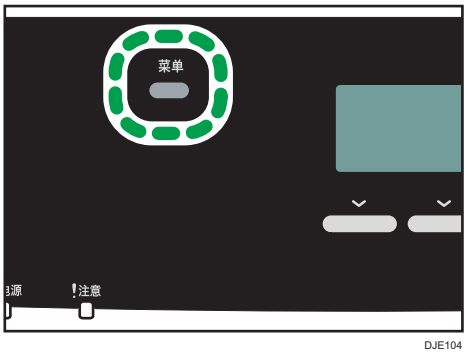

DJE104

3. **Press the [▲] or [▼] key to select [Network Settings], and then press the [OK] key.**
4. **If you are requested to enter a password, enter the password using the number keys, and then press the [OK] key.**
5. **Press the [▲] or [▼] key to select [IPv6 Configuration], and then press the [OK] key.**
6. **Press the [▲] or [▼] key to select [IPv6], and then press the [OK] key.**
7. **Press the [▲] or [▼] key to select [Active], and then press the [OK] key.**

8. Press the [▲] or [▼] key to select [DHCP], and then press the [OK] key.
9. Press the [▲] or [▼] key to select [Active], and then press the [OK] key.
10. Press the [菜单] key to return to the initial screen.
11. If you are requested to reboot the machine, turn off the machine, and then turn it back on.
12. Print the configuration page to confirm the setting.

    The IPv6 address setting will appear under "IPv6 Configuration" on the configuration page.

Assigning the machine's IPv6 address manually

Important

- The IPv6 address assigned to the machine must not be used by any other device on the same network.

1. Turn on the machine.
2. Press the [菜单] key.

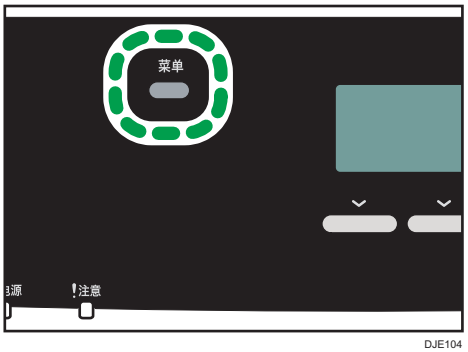

DJE104

3. Press the [▲] or [▼] key to select [Network Settings], and then press the [OK] key.
4. If you are requested to enter a password, enter the password using the number keys, and then press the [OK] key.
5. Press the [▲] or [▼] key to select [IPv6 Configuration], and then press the [OK] key.
6. Press the [▲] or [▼] key to select [IPv6], and then press the [OK] key.
7. Press the [▲] or [▼] key to select [Active], and then press the [OK] key.
8. Press the [▲] or [▼] key to select [DHCP], and then press the [OK] key.
9. Press the [▲] or [▼] key to select [Inactive], and then press the [OK] key.
10. Press the [▲] or [▼] key to select [Manual Config. Address], and then press the [OK] key.
11. Press the [▲] or [▼] key to select [Manual Config. Address], and then press the [OK] key.
12. Enter the machine's IPv6 address using the number keys, and then press the [OK] key.
13. Press the [▲] or [▼] key to select [Prefix Length], and then press the [OK] key.

14. **Enter the prefix length using the number keys, and then press the [OK] key.**
15. **Press the [▲] or [▼] key to select [Gateway Address], and then press the [OK] key.**
16. **Enter the gateway address using the number keys, and then press the [OK] key.**
17. **Press the [菜单] key to return to the initial screen.**
18. **If you are requested to reboot the machine, turn off the machine, and then turn it back on.**
19. **Print the configuration page to confirm the setting.**

    The IPv6 address setting will appear under "IPv6 Configuration" on the configuration page.

Sharing the Printer on a Network

This section explains how to configure this machine as a Windows network printer.

The network printer setting can be configured to enable network clients to use the machine.

- To change printer properties, you need access privileges for printer management. Log on using the account for the Administrator group members.
- The following procedure is based on Windows 7. If you are using another operating system, the procedure might differ slightly.

1. **On the [Start] menu, click [Devices and Printers].**

   If you are using a computer that is running Windows 8/8.1 or Windows Server 2012/2012 R2, click [Search] on the Charm Bar, and then click [Control Panel]. When the [Control Panel] window appears, click [View devices and printers].
2. **Right-click the icon of the printer you want to use, and then click [Printer properties].**

   The printer properties dialog box appears.
3. **On the [Sharing] tab, click [Share this printer].**
   - To share this printer with users using a different version of Windows, continue with this procedure.
   - If you have installed an alternative driver by selecting [Share this printer] during the printer driver installation, proceed to Step 8.
4. **Click [Additional Drivers...].**
5. **Select the version of Windows with which you want to share the printer, and then click [OK].**
6. **Click [Browse...], select the driver file, and then click [Open].**
7. **Click [OK].**
8. **On the [Advanced] tab, click the [Printing Defaults...] button.**

   Specify the default values for the printer driver to be used by client computers, and then click [OK].
9. **Click [Apply].**

10. Click [OK].

Wireless LAN Setup

This section explains how to configure the wireless LAN settings manually using the control panel. For easy setup using WPS (Wi-Fi Protected Setup), see Wi-Fi Settings Guide.

Important

- If [Inactive] is specified for the [Wi-Fi] setting, you cannot use the [Setup Wizard]. Specify [Active] for the [Wi-Fi] setting first. If you change the [Wi-Fi] setting, the machine must be restarted.
- Ensure that the router, access point, or device equipped with a wireless LAN, etc., is turned on.
- Check the authentication method and the name of the router, access point, or device equipped with a wireless LAN (SSID/IBSS) in advance.
- First, configure the wireless LAN setting, and then install the driver. For details about installing the driver, see the Driver Installation Guide.

Infrastructure mode

Use the following procedure to connect to the wireless LAN router or access point manually.

1. **Turn on the machine.**
2. **Press the [菜单] key.**
3. **Press the [▲] or [▼] key to select [Network Settings], and then press the [OK] key.**
4. **If you are requested to enter a password, enter the password using the number keys, and then press the [OK] key.**
5. **Press the [▲] or [▼] key to select [Wi-Fi Configuration], and then press the [OK] key.**
6. **Press the [▲] or [▼] key to select [Setup Wizard], and then press the [OK] key.**
7. **Press the [▲] or [▼] key to select [Infrastructure], and then press [Next].**
8. **Press the [▲] or [▼] key to select the destination SSID, and then press [Next].**

   If you cannot find the destination SSID, check if the device is turned on.

   When entering the SSID, select [Input SSID], and then press [Next].

   The SSID entry screen appears. Enter the SSID using the number keys, and then press [Next].
9. **Press the [▲] or [▼] key to select the authentication method, and then press [Next].**

   Select the same method that the router or access point is using.

   If you have selected [WPA2-PSK] or [Mix Mode WPA2/WPA], proceed to Step 11.
10. **Press the [▲] or [▼] key to select the encryption method, and then press [Next].**

    Select the same method that the router or access point is using.

11. **Enter the encryption key using the number keys, and then press [Connect].**

    If you selected [Shared Key] or [Open System] in Step 9, it is necessary to enter the ID. The ID is used for identifying the encryption key. You can register four encryption keys (ID 1 to 4). Use the [▲] or [▼] key to switch between the encryption key and ID settings.

12. **Press [Yes].**

    After connecting to the network, the Wi-Fi screen is displayed.

13. **Press the [▲] or [▼] key to select [Wi-Fi Status], and then press the [OK] key.**

    When "Connected" is displayed, the connection has been established.

    When "Disconnected" is displayed, the connection has not been established. Start again from the beginning.

Ad Hoc mode

This section explains how to connect directly to devices equipped with a wireless LAN, such as computers on a peer-to-peer network.

Important

- In Ad Hoc network, every device must be manually assigned an IP address for TCP/IP if there is no DHCP server.
- In Ad Hoc mode, only Open System or WEP encryption is supported. WPA2-PSK and Mix Mode WPA2/WPA authentication methods are not supported.

1. **Turn on the machine.**
2. **Press the [菜单] key.**
3. **Press the [▲] or [▼] key to select [Network Settings], and then press the [OK] key.**
4. **If you are requested to enter a password, enter the password using the number keys, and then press the [OK] key.**
5. **Press the [▲] or [▼] key to select [Wi-Fi Configuration], and then press the [OK] key.**
6. **Press the [▲] or [▼] key to select [Setup Wizard], and then press the [OK] key.**
7. **Press the [▲] or [▼] key to select [Ad-Hoc], and then press [Next].**
8. **Press the [▲] or [▼] key to select a communication channel, and then press [Next].**

   Select a channel that corresponds to the device that you are going to connect with.

   You can check the channel using the Properties dialog box of the network adapter of your computer.

   You can display the network adapter's Properties dialog box as follows:

   The following procedure is based on Windows 7.

   [Start] → [Control Panel] → [System and Security] → [System] → [Device Manager] → [Network adapters]

Select the wireless LAN adaptor, right-click on it, and then click Properties.

9. **Press the [▲] or [▼] key to select the destination device name (IBSS), and then press [Next].**

   If you cannot find the destination, check that the device is turned on.

   When entering the device name, select [Input SSID], and then press [Next]. The SSID entry screen appears. Enter the device name using the number keys, and then press [Next].

10. **Press the [▲] or [▼] key to select the authentication method, and then press [Next].**
11. **Press the [▲] or [▼] key to select the encryption method, and then press [Next].**
12. **Enter the encryption key and ID using the number keys, and then press [Connect].**

    The ID is used for identifying the encryption key. You can register four encryption keys (ID 1 to 4).

13. **Press [Yes].**

    After connecting to the network, the Wi-Fi screen is displayed.

14. **Press the [▲] or [▼] key to select [Wi-Fi Status], and then press the [OK] key.**

    When "Connected" is displayed, the connection has been established.

    When "Disconnected" is displayed, the connection has not been established. Start again from the beginning.

Restricting Machine Functions According to User

You can configure settings to require a user code when someone tries to use certain machine functions.

To enable this setting, you must first configure the machine settings via Web Image Monitor.

Important

- **To print jobs that require authentication you can use only the PCL printer driver. Printing such jobs from the PostScript 3 printer driver is not possible.**

Note

- For details about using Web Image Monitor, see page 93 "Using Web Image Monitor".

Enabling the User Restriction Settings

This section explains how to configure settings to permit only authorized users to use certain machine functions.

Using Web Image Monitor, enable user restriction for all or some of the functions listed below, and then register users who can use those functions.

- PictBridge printing
- Printing (both color and black-and-white)
- Color printing

You can specify functions available to each user upon authentication. Up to 30 users can be registered.

1. **Start the Web browser, and access the machine by entering its IP address.**
2. **Click [Restrict Available Functions].**
3. **Enter the administrator password if required.**
4. **Click [Apply].**

5. **Under "Available Functions", select [Restrict] for the functions you want to restrict, and then click [Apply].**

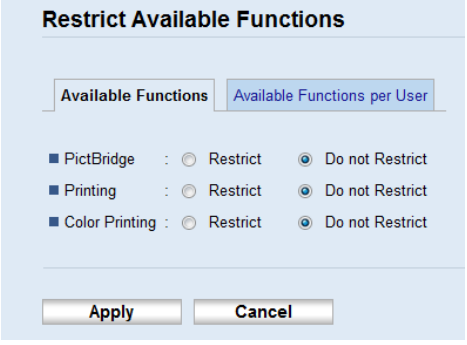

Select [Do not Restrict] for the functions you do not want to restrict.

The user restriction setting is enabled for the selected function. Proceed to the following steps to register users.

6. **Click [Available Functions per User].**

A list of currently registered user entries appears.

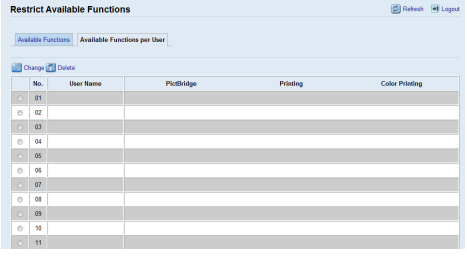

7. **Select a user entry, and then click [Change].**

The following window appears.

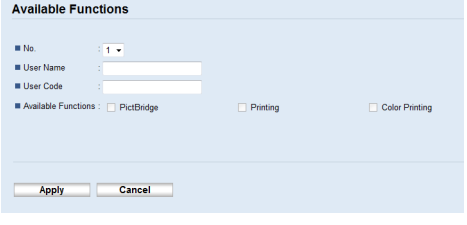

8. **Enter the user name in [User Name] using up to 16 alphanumeric characters.**
9. **Enter the user code in [User Code] using up to 8 digits.**

The user code will be used to authenticate users when they try to use a restricted function.

10. **Select the functions you want to make available to the user upon authentication.**

Unselected functions will be unavailable to users authenticated under this user code.

11. **Click [Apply].**

12. **Close the Web browser.**

Note

- You must enter both the user name and user code to register a user entry.
- Make sure that different user entries do not share the same user name or user code.

Modifying user entries

This section explains how to modify user entries.

1. **Start the Web browser, and access the machine by entering its IP address.**
2. **Click [Restrict Available Functions].**
3. **Enter the administrator password if required.**
4. **Click [Apply].**
5. **Click [Available Functions per User].**

   A list of currently registered user entries appears.
6. **Select the entry to modify, and then click [Change].**
7. **Modify settings as necessary.**
8. **Click [Apply].**
9. **Close the Web browser.**

Deleting user entries

This section explains how to delete user entries.

1. **Start the Web browser, and access the machine by entering its IP address.**
2. **Click [Restrict Available Functions].**
3. **Enter the administrator password if required.**
4. **Click [Apply].**
5. **Click [Available Functions per User].**

   A list of currently registered user entries appears.
6. **Select the entry to delete, and then click [Delete].**
7. **Confirm that the entry you have selected is the entry that you want to delete.**
8. **Click [Apply].**
9. **Close the Web browser.**

When Machine Functions are Restricted

Restricted functions can be used only by authorized users.

Depending on the restricted function, users will be authenticated from the machine's control panel or in the printer driver.

Important

- **To print jobs that require authentication you can use only the PCL printer driver. Printing such jobs from the PostScript 3 printer driver is not possible.**
- **The procedure in this section is an example based on Windows 7.**

The table below shows the functions that can be restricted, and how users can be authenticated to use them.

Restricted Function	Authentication method
• PictBridge printing	The machine requests for a user code when a digital camera is connected to the machine. The user must enter a valid user code from the control panel.
• Printing (both color and black-and-white) • Color printing	The user must enter a valid user code in the printer driver before executing a print command.

Authentication using the control panel

1. **If the machine requests for the user code, enter a user code using the number keys.**

   If you enter a wrong user code 3 times, the machine beeps and denies further attempts of authentication.

2. **Press the [OK] key.**

Authentication using the printer driver

1. **Open the file you want to print on your computer.**
2. **On the [File] menu, click [Print...].**
3. **In the [Select Printer] area, select the name of this machine, and then click [Preferences].**
4. **Click the [Valid Access] tab.**
5. **Enter the user code using 1 to 8 digits, and then click [OK].**
6. **Execute a print command.**

   If an incorrect user code is entered, the job will be canceled automatically (without any error message).

2. Loading Paper

Supported Paper

Tray 1

Type	Size	Weight	Capacity
Thin paper Plain paper Middle thick paper Thick paper 1, 2 Recycled paper Color paper Preprinted paper Prepunched paper Letterhead Bond paper Cardstock Label paper Envelope	A4 B5 JIS A5 B6 JIS A6 Legal ($8^1/_2$ × 14 inches) Letter ($8^1/_2$ × 11 inches) Half Letter ($5^1/_2$ × $8^1/_2$ inches) Executive ($7^1/_4$ × $10^1/_2$ inches) 8 × 13 inches $8^1/_2$ × 13 inches Folio ($8^1/_4$ × 13 inches) 16K (195 × 267 mm) Com 10 ($4^1/_8$ × $9^1/_2$ inches) Monarch ($3^7/_8$ × $7^1/_2$ inches) C5 Env (162 × 229 mm) C6 Env (114 × 162 mm) DL Env (110 × 220 mm) Custom size: 90 to 216 mm in width, 148 to 356 mm in length (3.54 to 8.50 inches in width, 5.83 to 14.0 inches in length)	60 to 160 g/m^2 (16 to 43 lb.)	250 (80 g/m^2, 20 lb.)

Tray 2 (option)

Type	Size	Weight	Capacity
Thin paper Plain paper Middle thick paper Thick paper 1 Recycled paper Color paper Preprinted paper Prepunched paper Letterhead	A4 Letter ($8^1/_2$ × 11 inches)	60 to 105 g/m^2 (16 to 28 lb.)	500 (80 g/m^2, 20 lb.)

Bypass tray

Type	Size	Weight	Capacity
Thin paper Plain paper Middle thick paper Thick paper 1, 2 Recycled paper Color paper Prepunched paper Letterhead Bond paper Cardstock Label paper Envelope	A4 B5 JIS A5 B6 JIS A6 Legal ($8^1/_2$ × 14 inches) Letter ($8^1/_2$ × 11 inches) Half Letter ($5^1/_2$ × $8^1/_2$ inches) Executive ($7^1/_4$ × $10^1/_2$ inches) 8 × 13 $8^1/_2$ × 13 Folio ($8^1/_4$ × 13 inches) 16K (195 mm × 267 mm) Com 10 ($4^1/_8$ × $9^1/_2$ inches) Monarch ($3^7/_8$ × $7^1/_2$ inches) C5 Env (162 × 229 mm) C6 Env (114 × 162 mm) DL Env (110 × 220 mm) Custom size: 90 to 216 mm in width, 148 to 356 mm in length (3.54 to 8.50 inches in width, 5.83 to 14.0 inches in length)	60 to 160 g/m^2 (16 to 43 lb.)	1

Note

- You cannot print on Legal size paper in the following cases:
  - PCL printer driver

    When [Gradation:] in [Print Quality] is set to [Fine]
  - PostScript 3 printer driver

    When [Print Quality] in [Printer Features] is set to [Best Quality]

Specifications of Paper Types

The following tables describe the types of paper that can be used with this machine.

Important

- Depending on the paper type, the toner may take a while to dry. Before handling printed sheets, make sure that they have fully dried. Otherwise, the toner may smudge.
- Print quality can be guaranteed only if recommended paper is used. For more information about the recommended paper, contact your sales or service representative.

Middle thick paper

Item	Description
Paper thickness	75 to 90 g/m^2 (20 to 24 lb.)
Supported paper tray	Can be used with any of the paper trays.
Duplex supported size	A4, B5 JIS, Legal (8$^1/_2$ × 14 inches), Letter (8$^1/_2$ × 11 inches), Executive (7$^1/_4$ × 10$^1/_2$ inches), 8 × 13, 8$^1/_2$ × 13, Folio (8$^1/_4$ × 13 inches), 16K (195 mm × 267 mm)

Thick paper 1

Item	Description
Paper thickness	91 to 105 g/m^2 (24 to 28 lb.)
Supported paper tray	Can be used with any of the paper trays.
Duplex supported size	None
Notes	The number of sheets that can be printed per minute is approximately half that of middle thick paper.

Thick paper 2

Item	Description
Paper thickness	106 to 160 g/m^2 (28 to 43 lb.)
Supported paper tray	Tray 1 and bypass tray
Duplex supported size	None
Notes	The number of sheets that can be printed per minute is approximately half that of middle thick paper.

Thin paper

Item	Description
Paper thickness	60 to 65g/m2 (16 to 17 lb.)
Supported paper tray	Can be used with any of the paper trays.
Duplex supported size	A4, B5 JIS, Legal ($8^1/_2$ × 14 inches), Letter ($8^1/_2$ × 11 inches), Executive ($7^1/_4$ × $10^1/_2$ inches), 8 × 13, $8^1/_2$ × 13, Folio ($8^1/_4$ × 13 inches), 16K (195 mm × 267 mm)

Plain paper

Item	Description
Paper thickness	66 to 74 g/m2 (18 to 20 lb.)
Supported paper tray	Can be used with any of the paper trays.
Duplex supported size	A4, B5 JIS, Legal ($8^1/_2$ × 14 inches), Letter ($8^1/_2$ × 11 inches), Executive ($7^1/_4$ × $10^1/_2$ inches), 8 × 13, $8^1/_2$ × 13, Folio ($8^1/_4$ × 13 inches), 16K (195 mm × 267 mm)

Recycled paper

Item	Description
Paper thickness	75 to 90 g/m^2 (20 to 24 lb.)
Supported paper tray	Can be used with any of the paper trays.
Duplex supported size	A4, B5 JIS, Legal ($8^1/_2$ × 14 inches), Letter ($8^1/_2$ × 11 inches), Executive ($7^1/_4$ × $10^1/_2$ inches), 8 × 13, $8^1/_2$ × 13, Folio ($8^1/_4$ × 13 inches), 16K (195 mm × 267 mm)
Notes	If the paper thickness is outside the specified range, select [Thin Paper], [Plain Paper], [Thick Paper 1], or [Thick Paper 2].

Color paper

Item	Description
Paper thickness	75 to 90 g/m^2 (20 to 24 lb.)
Supported paper tray	Can be used with any of the paper trays.

Item	Description
Duplex supported size	A4, B5 JIS, Legal ($8^1/_2$ × 14 inches), Letter ($8^1/_2$ × 11 inches), Executive ($7^1/_4$ × $10^1/_2$ inches), 8 × 13, $8^1/_2$ × 13, Folio ($8^1/_4$ × 13 inches), 16K (195 mm × 267 mm)
Notes	If the paper thickness is outside the specified range, select [Thin Paper], [Plain Paper], [Thick Paper 1], or [Thick Paper 2].

Preprinted paper

Item	Description
Paper thickness	75 to 90 g/m^2 (20 to 24 lb.)
Supported paper tray	Tray 1 and tray 2
Duplex supported size	A4, B5 JIS, Legal ($8^1/_2$ × 14 inches), Letter ($8^1/_2$ × 11 inches), Executive ($7^1/_4$ × $10^1/_2$ inches), 8 × 13, $8^1/_2$ × 13 inches, Folio ($8^1/_4$ × 13 inches), 16K (195 mm × 267 mm)
Notes	If the paper thickness is outside the specified range, select [Thin Paper], [Plain Paper], [Thick Paper 1], or [Thick Paper 2].

Prepunched paper

Item	Description
Paper thickness	75 to 90 g/m^2 (20 to 24 lb.)
Supported paper tray	Can be used with any of the paper trays.
Duplex supported size	A4, B5 JIS, Legal ($8^1/_2$ × 14 inches), Letter ($8^1/_2$ × 11 inches), Executive ($7^1/_4$ × $10^1/_2$ inches), 8 × 13, $8^1/_2$ × 13, Folio ($8^1/_4$ × 13 inches), 16K (195 mm × 267 mm)
Notes	If the paper thickness is outside the specified range, select [Thin Paper], [Plain Paper], [Thick Paper 1], or [Thick Paper 2].

Letterhead

Item	Description
Paper thickness	75 to 90 g/m^2 (20 to 24 lb.)
Supported paper tray	Can be used with any of the paper trays.

Item	Description
Duplex supported size	A4, B5 JIS, Legal ($8^1/_2$ × 14 inches), Letter ($8^1/_2$ × 11 inches), Executive ($7^1/_4$ × $10^1/_2$ inches), 8 × 13, $8^1/_2$ × 13, Folio ($8^1/_4$ × 13 inches), 16K (195 mm × 267 mm)
Notes	Paper that has a thickness outside the specified range cannot be printed onto.

Bond paper

Item	Description
Paper thickness	106 to 160 g/m^2 (28 to 43 lb.)
Supported paper tray	Tray 1 and bypass tray
Duplex supported size	None
Notes	• The number of sheets that can be printed in one minute is approximately half that of middle thick paper. • If the paper thickness is outside the specified range, select [Thick Paper 1].

Cardstock

Item	Description
Paper thickness	106 to 160 g/m^2 (28 to 43 lb.)
Supported paper tray	Tray 1 and bypass tray
Duplex supported size	None
Notes	• The number of sheets that can be printed in one minute is approximately half that of middle thick paper. • Paper thicker than 160 g/m^2 cannot be printed onto.

Label paper

Item	Description
Supported paper tray	Tray 1 and bypass tray
Duplex supported size	None

Item	Description
Notes	• The number of sheets that can be printed per minute is approximately half that of middle thick paper. • Avoid using adhesive label paper on which glue is exposed. Glue may stick to the inner parts of the machine, which can cause paper feed problems, deterioration in print quality, or premature wear of the print cartridge's photo conductor unit.

Envelope

Item	Description
Supported paper tray	Tray 1 and bypass tray
Duplex supported size	None

Notes

- Avoid using self-adhesive envelopes. They may cause machine malfunctions.
- The number of envelopes that can be printed per minute is approximately half that of middle thick paper.
- Paper can be loaded only up to the lower of the two paper limit marks of the tray.
- If printed envelopes come out badly creased, load the envelopes in the opposite direction. Also, configure the printer driver to rotate the print object 180 degrees. For details about changing the orientation see the printer driver Help.
- Environmental factors can degrade the print quality on both recommended and non-recommended envelopes.
- If envelopes are severely curled after printing, flatten them by bending them back against the curl.
- After printing, envelopes sometimes have creases along their long edges and toner smear on their unprinted sides. Print images might also be blurred. When printing large, black-solid areas, striping can occur as a result of the envelopes overlapping.
- To correctly specify the length of an envelope whose flap opens along its short edge, be sure to include the open flap when measuring.

CER112

- Fan envelopes, and then align their edges before loading.

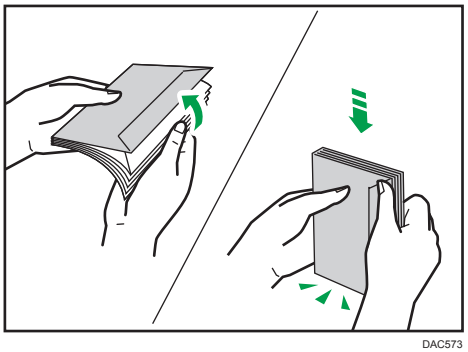

DAC573

- When fanning envelopes, make sure they are not stuck together. If they are stuck together, separate them.
- When fanning envelopes, make sure the envelope flaps are not stuck. If they are stuck, separate them.
- Before loading envelopes, flatten them out so that their curl does not exceed that shown as shown below.

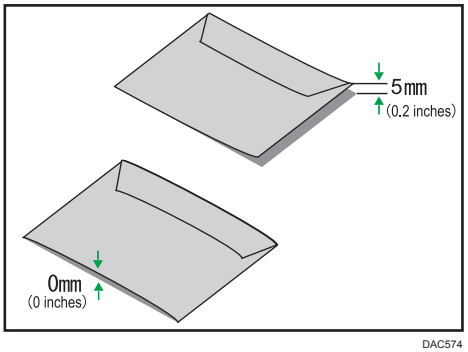

DAC574

- If the curl is severe, flatten out the envelopes using your fingers, as shown below.

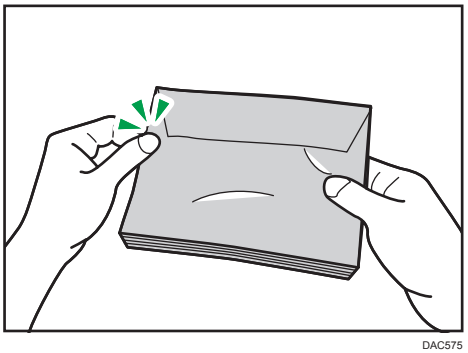

DAC575

Note

- You may not be able to perform duplex printing on 8 × 13, $8^1/_2$ × 13, Folio ($8^1/_4$ × 13 inches), or 16K (195 mm × 267 mm) size paper in the following cases:
  - PCL printer driver

    When [Gradation:] in [Print Quality] is set to [Fine]
  - PostScript 3 printer driver

    When [Print Quality] in [Printer Features] is set to [Best Quality]

Non-Recommended Paper Types

Do not use the following types of paper:

- Ink-jet printer paper
- Bent, folded, or creased paper
- Curled or twisted paper
- Torn paper
- Wrinkled paper
- Damp paper
- Dirty or damaged paper
- Paper that is dry enough to emit static electricity
- Paper that has already been printed onto, except a preprinted letterhead paper.

  Malfunctions are especially likely when using paper printed on by other than a laser printer (e.g.monochrome and color copiers, ink-jet printers, etc.)
- Special paper, such as thermal paper and carbon paper
- Paper weighing heavier or lighter than the limit
- Paper with windows, holes, perforations, cutouts, or embossing
- Adhesive label paper on which glue or base paper is exposed
- Paper with clips or staples

Note

- When loading paper, take care not to touch the surface of the paper.
- Even if paper is adequate for the machine, poorly stored paper can cause paper misfeeds, print quality degradation, or malfunctions.

Print Area

The diagram below shows the area of the paper that the machine can print on.

Paper

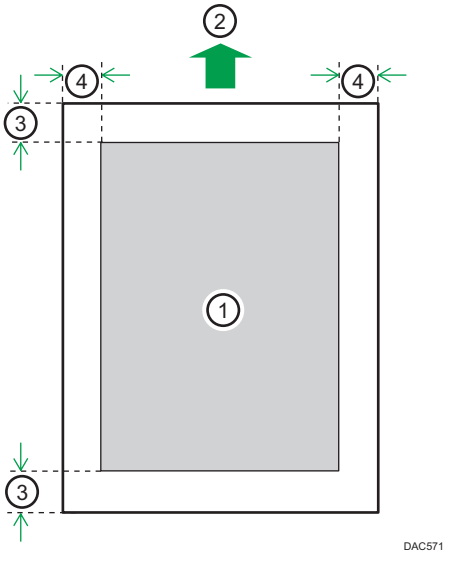

1. Print area
2. Feed direction
3. Approx. 4.2 mm (0.2 inches)
4. Approx. 4.2 mm (0.2 inches)

Envelope

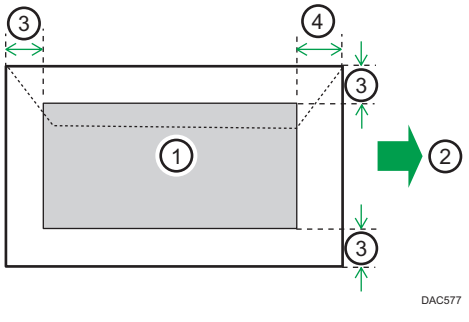

1. Print area
2. Feed direction
3. Approximately 10 mm (0.4 inches)
4. Approximately 15 mm (0.6 inches)

Note

- Borderless printing is not supported.
- The print area may vary depending on the paper size, printer language and printer driver settings.
- For better envelope printing, we recommend you set the right, left, top, and bottom print margins to at least 15 mm (0.6 inches) each.

Loading Paper

Loading Paper into Tray1 and 2

The following example explains the loading procedure for the standard paper tray (Tray 1).

The same procedure applies to loading paper in Tray 2.

Important

- Before printing on paper other than envelopes, make sure to pull up the levers on the machine rear, inside the rear cover.
- Curled paper may jam. Straighten curled paper before loading.
- After loading paper in the tray, specify the paper type and size using the control panel to avoid printing problems. This machine does not detect the paper size automatically.

1. **Pull out the paper tray carefully with both hands.**

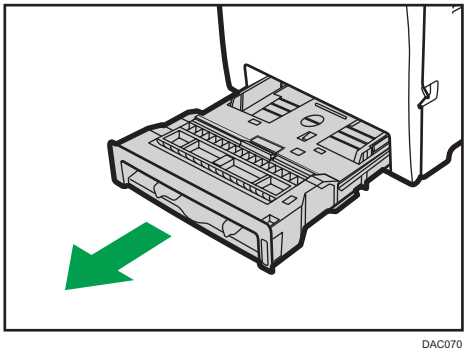

DAC070

Place the tray on a flat surface.

2. **Push the metal plate down until it clicks.**

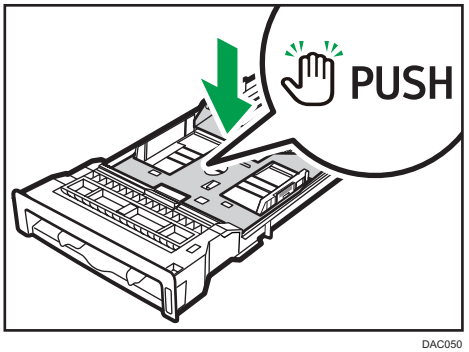

DAC050

3. **Pinch the clip on the side paper guide and slide it to match the paper size.**

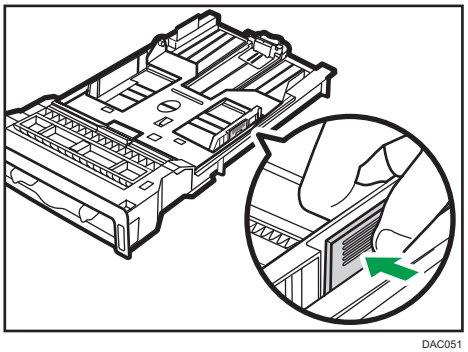

DAC051

When loading custom size paper, position the paper guide slightly wider than the actual paper size.

4. **Pinch the end paper guide and slide it inward to match the paper size.**

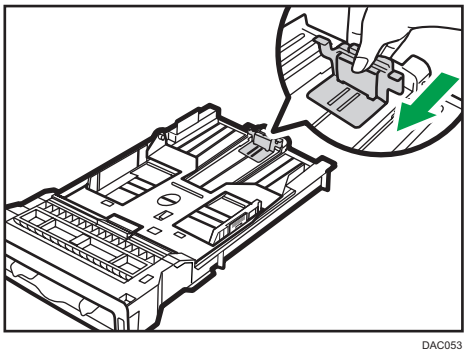

DAC053

When loading custom size paper, position the paper guide slightly wider than the actual paper size.

5. **Load new sheets of paper aligned with their side to be printed face down.**

Make sure the paper is not stacked higher than the upper limit marked inside the tray.

The upper limit mark in Tray 2 differs from the illustrated mark.

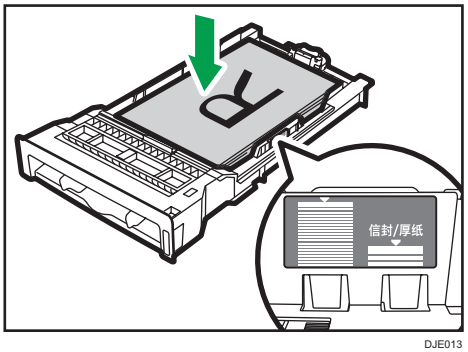

DJE013

Slide the guides inward until they are flush against the paper's sides.

Make sure the paper is not stacked higher than the projection on the side paper guides.

When using Tray 2, make sure the paper is not stacked higher than the upper limit marked inside the tray.

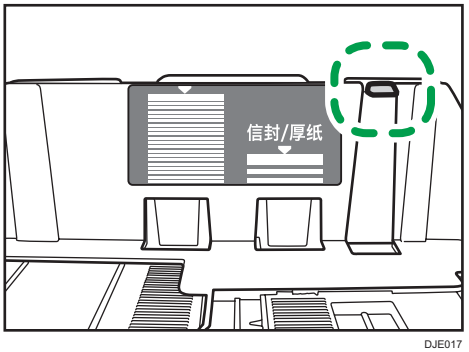

DJE017

6. **Check there are no gaps between the paper and the paper guides (both side and end paper guides).**

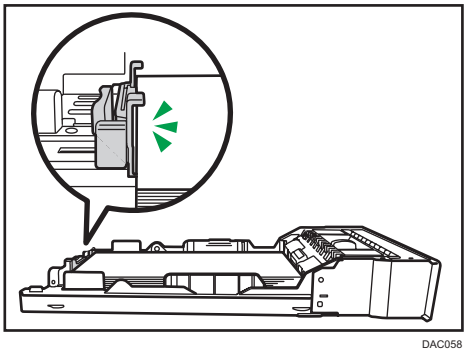

DAC058

7. **Carefully push the paper tray straight into the machine.**

   To avoid paper jams, make sure the tray is securely inserted.

Note

- The upper limit differs depending on the paper type (thin or thick paper). See the label inside the tray to check the upper limit.
- The remaining paper indicator on the right front side of the paper tray shows approximately how much paper is remaining.

Extending Tray 1 to load paper

This section explains how to load paper longer than A4 (297 mm) into the machine.

1. **Remove the rear cover using a coin.**

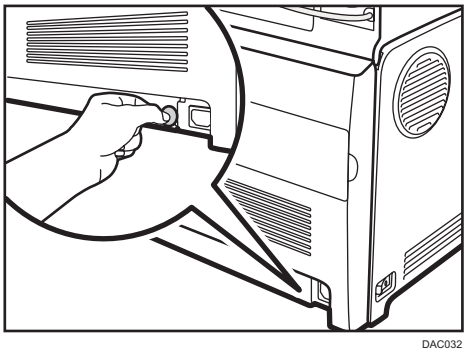

DAC032

2. **Pull out Tray 1 carefully with both hands.**

   Place the tray on a flat surface.

3. **Push the metal plate down until it clicks.**

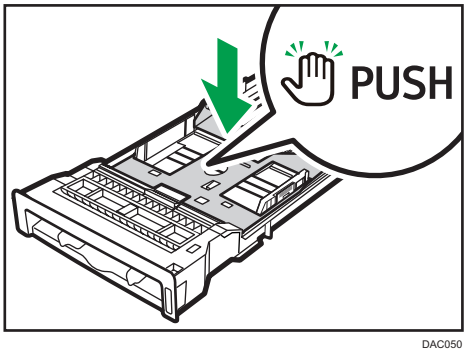

DAC050

4. **Pinch the extender in the "PUSH" direction, and then pull out the extender until it clicks.**

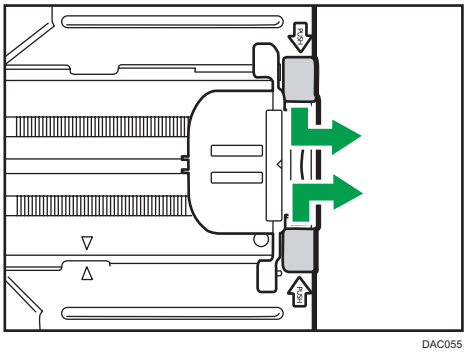

DAC055

After extension, check that the arrows on the extender and tray are aligned.

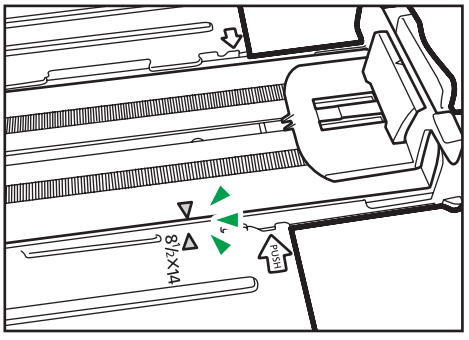

DAC056

5. Follow Steps 3 to 7 in "Loading Paper into Tray1 and 2".

Note

- To reinsert the extender, you might have to push it with moderate force.

Loading Paper into Bypass Tray

Important

- Before printing on paper other than envelopes, make sure to pull up the levers on the machine rear, inside the rear cover.
- Load paper with the print side down and in the short-edge feed direction.
- Do not load paper while the machine is printing.
- Curled paper may jam. Straighten curled paper before loading.
- Duplex printing is not possible.
- Tray 1 and 2 are unavailable if paper is loaded in the bypass tray.
- You cannot load paper into the bypass tray while the machine is in Energy Saver mode.

1. Insert the top edge of the paper into the machine.

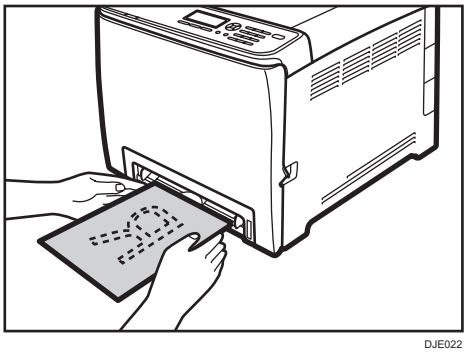

DJE022

2. Adjust the paper guides to the paper size.

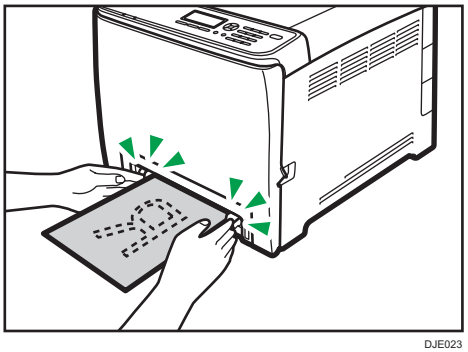

DJE023

3. Support the paper with both hands, and insert it carefully until it stops.

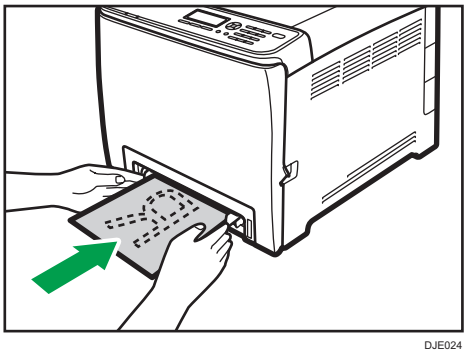

DJE024

Loading Envelopes

Important

- Before printing on envelopes, make sure to lower the levers on the machine rear, inside the rear cover, to avoid envelopes coming out creased. Also, pull up the levers back to their original positions after printing.
- Avoid using self-adhesive envelopes. They may cause machine malfunctions.
- Check there is no air in the envelopes before loading.
- Load only one size and type of envelope at a time.
- Before loading envelopes, flatten their leading edges (the edge going into the machine) by running a pencil or ruler across them.
- Some kinds of envelope might cause misfeeds, wrinkles or print poorly.
- Print quality on envelopes may be uneven if parts of an envelope have different thicknesses. Print one or two envelopes in advance to check the print quality.
- In a hot and humid environment, the envelope might be delivered creased or with low printing quality.

Lowering the fusing unit levers

1. **Pull the front cover open lever, and then carefully lower the front cover.**

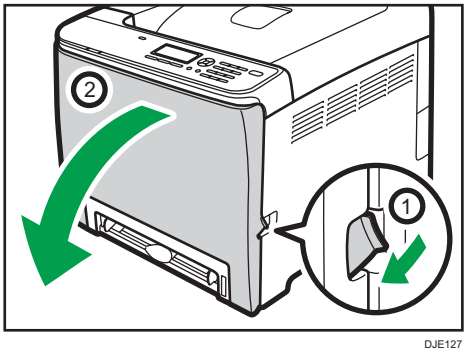

DJE127

2. **Lower the fusing unit levers.**

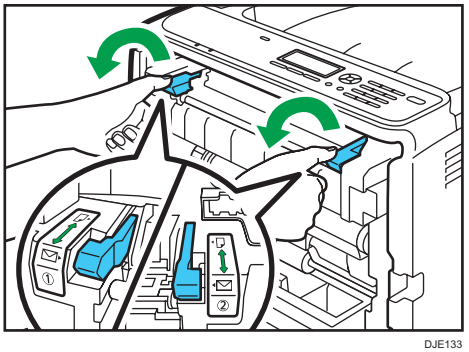

DJE133

3. **Using both hands, carefully push up the front cover until it closes.**

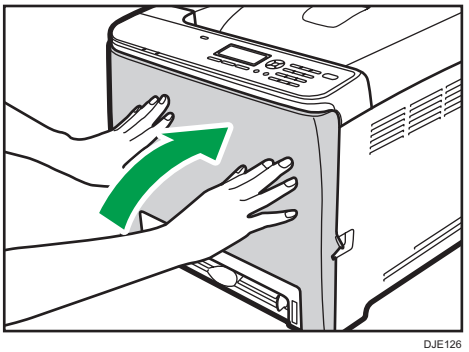

DJE126

For details about loading an envelope, see page 48 "Loading Paper into Tray1 and 2", and page 52 "Loading Paper into Bypass Tray". Note that you cannot load an envelope in Tray 2.

Note

- Be sure to load envelopes so that their flaps are on the right. If you do not, the envelopes will become creased.

- If printed envelopes come out badly creased, load the envelopes in the opposite direction, and then rotate the print object by 180 degrees using the printer driver before printing. For details, see the printer driver Help.
- When Using Tray 1
  - If the envelope flap is on a short side, place the envelope with the flap side in the tray recess. If the envelope flap is on a long side, place the envelope with the flap side on the right.

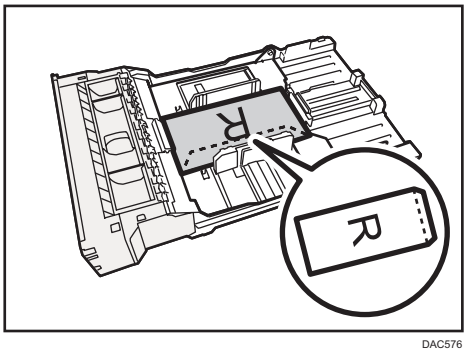

DAC576

- When Using the Bypass Tray
  - If the envelope flap is on a short side, place the envelope with the flap side in the front part of the tray. If the envelope flap is on a long side, place the envelope with the flap side on the right.

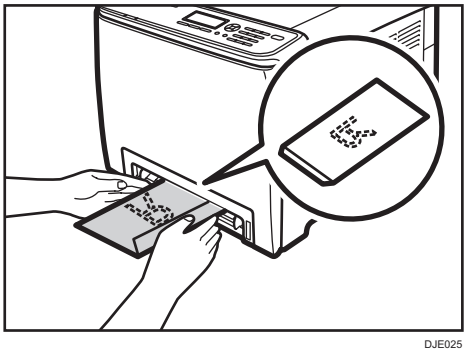

DJE025

Specifying Paper Type and Paper Size Using Control Panel

This section explains how to specify the paper size and paper type using the control panel.

Note

- Paper type and size can also be specified using the printer driver. For details, see the printer driver Help.
- For prints from the bypass tray or Tray 1, you can select to print according to either the printer driver settings or the control panel settings with [Bypass Tray Priority] or [Tray1 Priority] under tray

paper settings. For details about [Bypass Tray Priority] and [Tray1 Priority], see page 79 "Tray Paper Settings".

- If [Auto Continue] under system settings is enabled, printing stops temporarily if a paper type/size error is detected. The printing restarts automatically with the settings made with the control panel after about ten seconds. However, if the size of paper specified on the control panel and that of the paper loaded in the paper tray or the paper size specified for the print job do not match when printing restarts, it may cause a paper jam. For details about [Auto Continue], see page 75 "System Settings".

Specifying the paper type

This section explains how to specify the paper type.

1. **Press the [菜单] key.**

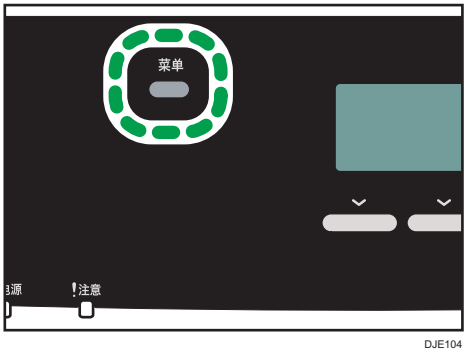

DJE104

2. **Press the [▲] or [▼] key to select [Tray Paper Settings], and then press the [OK] key.**
3. **Press the [▲] or [▼] key to select the paper type setting for the desired tray, and then press the [OK] key.**
4. **Press the [▲] or [▼] key to select the desired paper type, and then press the [OK] key.**
5. **Press the [菜单] key to return to the initial screen.**

Specifying the standard paper size

This section explains how to specify the standard paper size.

1. Press the [菜单] key.

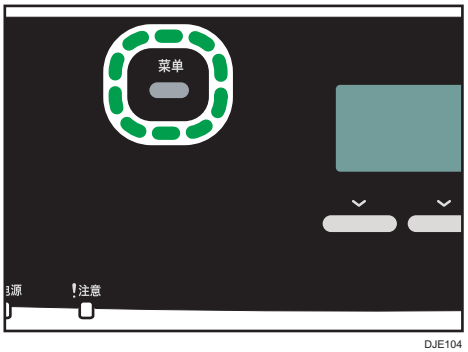

DJE104

2. Press the [▲] or [▼] key to select [Tray Paper Settings], and then press the [OK] key.
3. Press the [▲] or [▼] key to select the paper size setting for the desired tray, and then press the [OK] key.
4. Press the [▲], [▼], [◀], or [▶] key to select the desired paper size, and then press the [OK] key.
5. Press the [菜单] key to return to the initial screen.

Specifying a custom paper size

This section explains how to specify a custom paper size.

Important

- When you perform printing, make sure that the paper size specified with the printer driver matches the paper size specified with the control panel. If a paper size mismatch occurs, a message appears on the display. To ignore the error and print using mismatched paper, see page 61 "If a Paper Mismatch Occurs".
- Custom size paper cannot be loaded in Tray 2.

1. Press the [菜单] key.

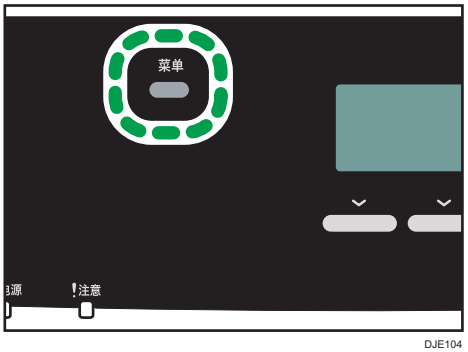

DJE104

2. Press the [▲] or [▼] key to select [Tray Paper Settings], and then press the [OK] key.

3. **Press the [▲] or [▼] key to select the paper size setting for the desired tray, and then press the [OK] key.**
4. **Press the [▲], [▼], [◀], or [▶] key to select [Custom Size], and then press the [OK] key.**
5. **Press the [▲] or [▼] key to select [mm] or [inch], and then press the [OK] key.**
6. **Enter the width using number keys, and then press the [OK] key.**

   To enter a decimal point, press the [✱] key.
7. **Enter the length using number keys, and then press the [OK] key.**

   To enter a decimal point, press the [✱] key.
8. **Press the [菜单] key to return to the initial screen.**

3. Printing Documents

Basic Operation

This section explains the basic printing procedure.

1. **Open the [Printing Preferences] dialog box in your document's application.**

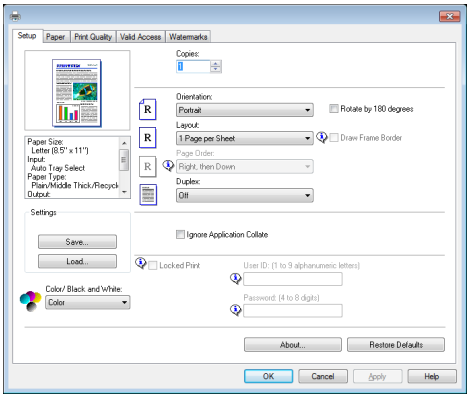

For details about each setting, click [Help]. You can also click the information icons to display configuration information.

2. **Configure printing option settings as necessary, and then click [OK].**

The printer properties dialog box closes.

3. **Click [OK].**

Note

- If a paper jam occurs, printing stops after the current page has been printed out. After the jammed paper is removed, printing restarts from the jammed page automatically. For details about how to remove the jammed paper, see page 143 "Removing Printing Jams".
- After printing on envelopes, make sure to pull up the levers for printing on envelopes back to their original positions. For details about the levers for printing on envelopes, see page 53 "Loading Envelopes".

Canceling a Print Job

You can cancel print jobs using either the machine's control panel or your computer, depending on the status of the job.

Canceling a print job before printing has started

Windows

1. Double-click the printer icon on the task tray of your computer.
2. Select the print job you want to cancel, click the [Document] menu, and then click [Cancel].

Mac OS X

1. From the Apple menu, select [System Preferences...].
2. Under "Hardware", click [Print & Fax] or [Print & Scan].
3. Double-click the machine from "Printers".
4. Select the print job you want to cancel, and then click [Delete].

Note

- If you cancel a print job that has already been processed, printing may continue for a few pages before being canceled.
- It may take a while to cancel a large print job.

Canceling a print job while printing

1. Press the [清除/停止] key.

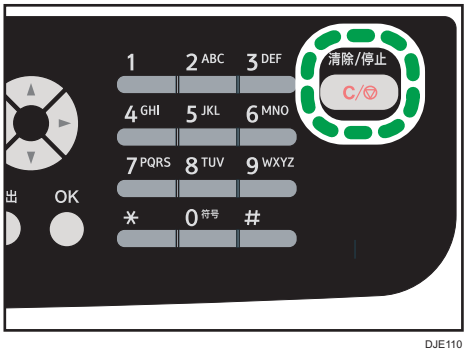

DJE110

If a Paper Mismatch Occurs

The machine reports an error if:

- The paper size or type does not match the print job's settings when [Input Tray:] is set to [Auto Tray Select].

There are two ways to resolve these errors:

Continue printing using mismatched paper

Use the form-feed function to ignore the error and print using mismatched paper.

Reset the print job

Cancel printing.

Continuing Printing Using Mismatched Paper

If the paper is too small for the print job, the printed image will be cropped.

1. **Press [FormFeed] while the error message is being displayed.**

Resetting the Print Job

1. **When the error message is displayed, press [JobReset].**

Printing Confidential Documents

By the Locked Print function, you can password-protect print jobs.

This means that your job is printed only after you enter the password using the machine's control panel.

This function prevents unauthorized users from seeing sensitive documents at the machine.

Important

- This function is only available when using the PCL printer driver, and printing from a computer running a Windows operating system.
- The procedure in this section is an example based on Windows 7.

Storing a Locked Print file

This section explains how to store a Locked Print file in the machine using the printer driver.

1. **Open the file you want to print on your computer.**
2. **On the [File] menu, click [Print...].**
3. **In the [Select Printer] area, select the name of this machine, and then click [Preferences].**
4. **Click the [Setup] tab, and then select [Locked Print].**

   The [Password:] and [User ID:] text boxes become available.

   The [User ID:] text box contains the login user name of your computer account or the user code used for the previous Locked Print job.
5. **Type the password (containing 4 to 8 digits) and user ID (containing 1 to 9 alphanumeric characters), and then click [OK].**

   The user code will be used to identify your Locked Print file on the machine's control panel.
6. **Execute a print command.**

   The print job is stored in the machine as a Locked Print file. You can print the file by entering the password using the control panel.

Note

- The Locked Print file is automatically erased from the machine's memory when it is printed out, or when the machine's power is turned off.
- The machine can store up to 5 jobs or 5 MB of Locked Print data at a time.
- Even if the machine cannot store any more Locked Print files, the machine holds a new Locked Print file for the period of time specified in [Locked Print] under system settings before canceling the job. Within this time, you can print or delete the new Locked Print file. You can also print or delete an existing Locked Print file so that the new Locked Print file can be stored in the machine.

- When a Locked Print job is canceled, the machine automatically logs the cancellation. You can use this log to identify which Locked Print jobs have been canceled.

Printing a Locked Print file

When there is a Locked Print file stored in the machine, "Locked Print Job Press Menu key" appears on the machine's control panel display when the machine is in the printer mode.

```
Locked Print Job

K ■■■■■    Y ■■■■■
M ■■■■■    C ■■■■■
```

```
Press Menu Key

K ■■■■■    Y ■■■■■
M ■■■■■    C ■■■■■
```

Use the following procedure to unlock and print the Locked Print file.

1. **When the Locked Print message is displayed, press the [菜单] key.**
2. **Press the [▲] or [▼] key to select the file you want to print, and then press the [OK] key.**

```
Locked Print Job        1/2 ⬍ OK
20:17 Job5
20:15 Job4
20:13 Job3
```

   Identify the Locked Print file by checking its time stamp and user ID.

3. **Press [Print].**
4. **Enter the password using the number keys, and then press the [OK] key.**

   The Locked Print file is printed.

Note

- You cannot print a Locked Print file while the machine is currently printing. The machine beeps if you try to do so.
- While entering a password using the control panel, the machine cannot process other print jobs.
- The Locked Print file is automatically erased from the machine's memory when it is printed out, or when the machine's power is turned off.

Deleting a Locked Print file

If there is a Locked Print file stored in the machine, "Locked Print Job Press Menu key" appears on the machine's control panel display when the machine is in the printer mode.

```
Locked Print Job

K ■■■■■   Y ■■■■■
M ■■■■■   C ■■■■■
```

```
Press Menu Key

K ■■■■■   Y ■■■■■
M ■■■■■   C ■■■■■
```

Use the following procedure to delete a Locked Print file. You do not need to enter a password to delete a Locked Print file.

1. **When the Locked Print message is displayed, press the [菜单] key.**
2. **Press the [▲] or [▼] key to select the file you want to delete, and then press the [OK] key.**

```
Locked Print Job        1/2 ⬍ OK
20:17 Job5
20:15 Job4
20:13 Job3
```

   Identify the Locked Print file by checking its time stamp and user ID.

3. **Press [Delete].**

   The Locked Print file is deleted.

   If there are Locked Print files/logs remaining in the machine, the display returns to the list of Locked Print files/logs. If there are none remaining, the display returns to the initial screen.

Checking which Locked Print File Jobs Have Been Canceled

When a Locked Print job is canceled, the machine automatically logs the cancellation. If the machine has created a cancellation log, "Locked Print Job Deleted Press Menu key" will appear on the control panel display when the machine is in the copier mode.

```
Locked Print Job Deleted

K ■■■■■   Y ■■■■■
M ■■■■■   C ■■■■■
```

```
Press Menu Key

K ■■■■■   Y ■■■■■
M ■■■■■   C ■■■■■
```


Use the following procedure to check which Locked Print file jobs have been canceled.

1. **When the Locked Print message is displayed, press the [菜单] key.**
2. **Press the [▲] or [▼] key to find a file whose name starts with an "!" mark.**

   The "!" mark indicates that the job has been canceled.

   ```
   Locked Print Job        1/2 ⬍ OK
   20:11 Job2
   20:09 Job1
   !20:19 Job6
   ```

   Identify the Locked Print file by checking its time stamp and user ID.

   To delete the log entry, proceed to the following steps.
3. **Press the [OK] key.**
4. **Press [Delete].**

   The log is deleted.

   If there are Locked Print logs/files remaining in the machine, the display returns to the list of Locked Print logs/files. If there are none remaining, the display returns to the initial screen.

Note

- The machine keeps a log of the 10 most recent canceled jobs. If a Locked Print file is canceled when the machine's log is already full, the oldest log will be deleted automatically.
- The message "Locked Print Job Deleted Press Menu key" disappears when all log entries are cleared.
- The log will be cleared when the machine is turned off.

Direct Printing from a Digital Camera (PictBridge)

What Is PictBridge?

You can connect a PictBridge-compatible digital camera to this machine using a USB cable. This allows you to directly print photographs by operating the digital camera.

Note

- Check that your digital camera is PictBridge-compatible.
- Up to 999 images can be sent from the digital camera to the machine during one print transaction. If an attempt is made to send more images, an error message is sent to the camera and printing fails.
- Since printing conditions are specified on the digital camera, specifiable parameters depend on the digital camera. For details, see the manuals provided with the digital camera.
- This function is compatible with USB 2.0.

PictBridge Printing

Use the following procedure to start PictBridge printing on this machine.

Important

- Memory overflow errors can occur during printing a high-resolution image. If this happens, reduce the size of the data, and then try the operation again.
- Do not disconnect the USB cable while data is being sent. If you do, printing will fail.

1. **Make sure that both the machine and the digital camera are turned on.**
2. **Connect the USB cable to the USB host interface board on the machine and to your digital camera.**

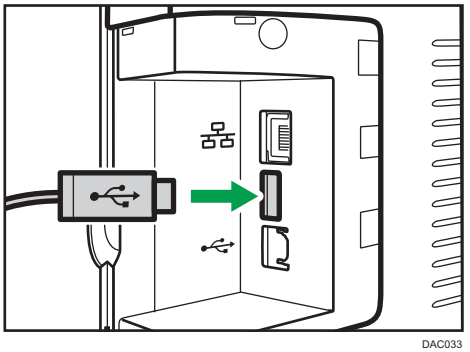

DAC033

When the printer recognizes the digital camera as a PictBridge device, "PictBridge Connecting...", then "Ready" will appear on the machine's control panel.

3. **On your digital camera, select the images you want to print, and then specify the printing conditions.**
4. **The machine receives the specified data from the digital camera and starts printing.**

Note

- Some digital cameras require specifying settings manually for PictBridge operation. For details, see the manual provided with the digital camera.
- Some digital cameras require manually operating a switch for PictBridge operation. For details, see the manual provided with the digital camera.
- Some digital cameras need to be switched off when connecting to the printer. For details, see the manual provided with the digital camera.

What Can Be Done on this Machine

This machine can perform the following functions using its PictBridge feature.

The settings available for these functions are as follows:

- Single image printing
- Selected image printing
- All image printing
- Index printing
- Copies
- Paper size
- N-up layout

Note

- The setting parameters and their names may vary depending on the digital camera. For details, see the manuals provided with the digital camera.

Exiting PictBridge

Use the following procedure to quit the PictBridge mode.

Important

- **Do not disconnect the USB cable while data is being sent to the machine. If you do, printing will fail.**

1. **Check that "Ready" appears on the screen.**

2. **Disconnect the USB cable from the machine.**

When PictBridge Printing Does Not Work

This section explains likely causes and possible solutions for problems that can occur during PictBridge printing.

Problem	Cause	Solution
PictBridge is not available.	There is a problem with the USB connection or the PictBridge settings.	Use the following procedure to check the connection and settings: 1. Disconnect and then reconnect the USB cable. 2. Check the PictBridge settings are enabled. 3. Disconnect the USB cable, and then turn off the machine. Turn the machine back on. When the machine has fully booted up, reconnect the USB cable.
When two or more digital cameras are connected, the second and subsequent cameras are not recognized.	You have connected multiple digital cameras.	Connect one digital camera only. Do not connect multiple cameras.
Cannot print.	The specified number of prints exceeds the maximum number that can be printed at a time.	The maximum specifiable print quantity at a time is 999. Change the quantity to 999 or less, and then retry printing.

Problem	Cause	Solution
Cannot print.	The specified type of paper is not loaded.	The specified type of paper is not loaded. If you have to use paper that is not of the specified size, perform continue printing using mismatched paper or cancel the print job. For details, see page 61 "If a Paper Mismatch Occurs".
Cannot print.	The specified paper size is not supported by this machine.	Select the paper with the size that can be printed on the machine.

Using Various Print Functions

This section briefly describes various print functions that you can configure with the printer driver to make printouts appropriate for your purposes.

Print Quality Functions

Print quality and color tone can be adjusted to suit the print data. Some of the print quality settings you can configure are described below.

Printing color documents in black and white

The black produced in black and white printing is a more distinct black than that produced in color printing.

Separating the print data into CMYK and printing in designated color only

Normally, all four colors (CMYK) are used for color printing. If you do not want to use certain colors, you can disable the use of those colors and print using other colors only.

Saving toner when printing (Economy Color printing)

You can save toner by printing with lower toner consumption. The amount of toner that will be used depends on the object, such as text, line, or image.

Changing the image printing method

You can select to print with priority on print quality or print speed. When printing images, the higher the resolution of images is, the longer the time is required for printing.

Changing the dither pattern

A dither pattern is a pattern of dots used to simulate a color or shade of an image. If the pattern is changed, the characteristics of the image will also change. You can select a pattern suitable for the image to be printed.

Changing the color profiling pattern

You can select a color profiling pattern to adjust the tone of colors according to the colors displayed on the computer screen.

Because colors on the computer screen are created using the three RGB colors while colors for printing are composed of the four CMYK colors, colors need to be converted during the printing process. Therefore, images on the printed paper may look different from those on the computer screen if adjustment is not performed.

Printing grayscale images using black or CMYK

You can print black or gray sections of an image using black toner only, instead of using all CMYK toners. Compared to the black printed with CMYK toner, this results in a black that is flatter and purer.

Using ICM (Image Color Matching)

You can use Windows ICM function to reproduce colors that appear on the computer screen as close as they are on printed paper.

To use this function, the color profile must be added to the computer. You can find the color profile in the ICM folder stored on the provided printer driver CD-ROM. For information about adding a color profile, search Windows Help for "color profile", and then see the appropriate topic.

Note

- Some of the functions described above might not be available depending on the printer driver or operating system. For details, see the printer driver Help.

Print Output Functions

You can specify the form of print outputs according to your purposes. This section briefly describes some of the settings that you can specify.

Printing multiple sets of a document

You can print multiple sets of the same document.

Collating the output in document batches

You can print complete sets of a multiple-page document one set at a time (P1, P2, P1, P2 ...). If this function is not used when printing multiple sets, prints will be output in page batches (P1, P1, P2, P2 ...). This function is useful when, for example, making presentation materials.

Changing orientation or rotating the image

You can change the orientation of an image to portrait or landscape. You can also rotate the image by 180 degrees. Use rotation to prevent an image from being printed upside down when using paper with a predefined top and bottom (such as letterhead paper).

Printing multiple pages per sheet

You can print multiple pages onto one sheet of paper.

When using this function, a suitable reduction ratio is selected automatically based on the paper size and the number of pages you want to fit on each sheet.

Printing on both sides of paper (duplex printing)

You can print on both sides of paper.

Reducing or enlarging the document

You can reduce or enlarge documents by a specific ratio, from 25% to 400% in 1% increments. You can also reduce or enlarge documents automatically to fit a specific paper size. This function is useful, for example, when printing Web pages.

If the [Enable Large Papers] option is selected, A3/11 × 17/B4/8K documents can be scaled to a size that the machine supports, so that it can then be printed out.

Not printing of blank pages

If a print job contains blank pages, they can be prevented from being printed.

Note that this setting has higher priority than [Blank Page Print] under printer feature settings of the control panel.

Printing with a cover page

You can add a cover page to the print job.

You can select to leave the cover page blank, or print the first page of the document on the cover page. If a cover page is inserted into a duplex job, you can print on its back side also.

Paper for the cover page can either be the same as or different from the remaining pages.

Printing on custom size paper

You can print using non-standard size paper by specifying the size of the paper as custom size.

To specify the custom paper size, select [Custom Paper Size] from the [Document Size:] list, and then click the [Custom Paper Size...] button in the lower part of the dialog box to configure the paper size.

Superimposing text on prints (watermark)

You can superimpose watermark text on prints. Various predefined watermarks are provided. You can also create your own watermarks.

Note

- Some of the functions described above might not be available depending on the printer driver or operating system. For details, see the printer driver Help.

4. Configuring the Machine Using the Control Panel

Basic Operation

1. **If you want to configure the machine's system settings, press the [菜单] key.**

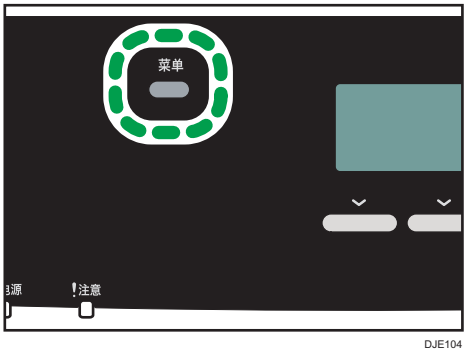

DJE104

2. **Press the [▲] or [▼] key to select the settings you want to use.**
3. **To confirm setting items and values displayed, press the [OK] key.**
4. **To go back to the previous item, press the [退出] key.**

   To return to the initial screen, press the [退出] key the same amount of times as the number of selected items, or press the [菜单] key once.

Menu Chart

This section lists the parameters included in each menu.

For details about configuring the machine using Web Image Monitor, see page 93 "Configuring the Machine Using Web Image Monitor".

Important

- Some items can also be configured using Web Image Monitor.

System Settings

[I/O Timeout], [Auto Continue], [Supplies Status], [Anti-Humidity Level], [Color Registration], [Auto Cleaning], [B&W Print Priority], [Notify: Toner Almost Empty]

Tray Paper Settings

[Paper Size: Tray 1], [Paper Size: Tray 2], [Paper Size: Bypass Tray], [Paper Type: Tray 1], [Paper Type: Tray 2], [Paper Type: Bypass Tray], [Tray1 Priority], [Bypass Tray Priority], [Paper Tray Priority]

Network Settings

[Ethernet], [Wi-Fi Configuration], [IPv4 Configuration], [IPv6 Configuration]

Print List/Report

[Maintenance Page]

Admin. Tools

[System Auto Reset Timer], [Energy Saver Mode], [Language], [Reset Settings], [Admin. Tools Lock], [IPsec]

Printer Features

[List/Test Print], [System], [PCL Menu], [PS Menu]

System Settings

I/O Timeout

- USB

  Specifies how many seconds the machine waits for print data, if the data is interrupted while it is being sent from the computer via USB. If the machine does not receive any more data within the time specified here, the machine only prints the data it has received. If printing is frequently interrupted by data from other ports, increase the timeout period.

  Default: [60 sec.]

  - 15 sec.
  - 60 sec.
  - 300 sec.

- Network

  Specifies how many seconds the machine waits for print data, if the data is interrupted while it is being sent from the computer via network. If the machine does not receive any more data within the time specified here, the machine only prints the data it has received. If printing is frequently interrupted by data from other ports, increase the timeout period.

  Default: [60 sec.]

  - 15 sec.
  - 60 sec.
  - 300 sec.

- Locked Print

  Specifies how many seconds the machine holds a new Locked Print file, when the machine cannot store any more Locked Print files. Within this time, you can print or delete the new Locked Print file. You can also print or delete an existing Locked Print file so that the new Locked Print file can be stored in the machine.

  Default: [60 seconds]

  - 0 to 300 seconds, in increments of 1 second

- Fixed USB Port

  Specifies whether the same printer driver can be used for multiple machines or not under USB connection.

  Default: [Off]

  - Off

    You must install the printer driver separately for individual machines, because the machine other than the original will be recognized as a new device upon USB connection.

- On

  The same printer driver you have installed in your computer can be used with any machine other than the one originally used for installation, if the machine is of the same model.

Auto Continue

Sets the machine to ignore an error with paper size or type and continue printing. The printing stops temporarily when an error is detected, and restarts automatically after about ten seconds using the settings made on the control panel. However, if the size of paper specified on the control panel and that of the paper loaded in the paper tray or the paper size specified for the print job do not match when printing restarts, it may cause a paper jam.

Default: [Off]

- Off
- On

Supplies Status

Displays information about consumables.

- Toner
  - Black
  - Magenta
  - Cyan
  - Yellow

  The level indicator (black squares) indicates the remaining life. You need to replace the consumable when the level is zero (completely white).
- Other Supplies
  - Waste Toner Bottle:

    [Waste Toner Bottle: Full] (Usable), [WasteTnr.Bttl.: AlmostFull] (Almost full and needs replacing soon), [Waste Toner Bottle: Ready] (Needs replacing)
  - Fusing Unit:

    Displays the remaining life of the fusing unit.
  - IntTrans. Belt

    Displays the remaining life of the Intermediate Transfer Belt.
  - Transfer Roller:

    Displays the remaining life of the transfer roller.

  The level indicator (black squares) indicates the remaining life. You need to replace the consumable when the level is zero (completely white).

Anti-Humidity Level

Sets the machine to produce prints in consistent quality even when humidity is high.

Note that the default value for this setting will not be restored by performing [Reset All Settings] under [Admin. Tools] or [Reset Menu Settings] under [Administrator Tools] of Web Image Monitor.

Default: [Off]

- Off
- Lvl.1: Weak

  Select this mode if printouts are blurred.
- Lvl.2: Medium

  Select this mode if printouts are curled and/or blurred. Note that if you select this mode, the first print takes longer than subsequent prints to be complete.
- Lvl.3: Strong

  Select this mode if printouts are still curled and/or blurred even when prints are made in [Lvl. 2: Medium]. Note that this mode requires more time to produce the first print than [Lvl.2: Medium].

Color Registration

Adjusts color registration as necessary. (This adjustment is usually executed by the machine automatically.)

Press [Yes] to execute color registration adjustment. Press [No] to exit to the previous level of the menu tree without adjusting color registration.

Auto Cleaning

Sets the machine to execute periodic cleaning of the interior. You may hear some noise while cleaning is being executed. This noise does not indicate a malfunction.

Default: [On]

- On
- Off

B&W Print Priority

Sets the machine to suppress the consumption of color toner when printing black-and-white pages. Also, the amount of color toner consumed during warm-up time for maintenance will also be lowered. Note that the default value for this setting will not be restored by performing [Reset All Settings] under [Admin. Tools] or [Reset Menu Settings] under [Administrator Tools] of Web Image Monitor.

Default: [Off]

- On
- Off

Notify: Toner Almost Empty

Specifies the low toner level notification timing.

Note that the default value for this setting will not be restored by performing [Reset All Settings] under [Admin. Tools] or [Reset Menu Settings] under [Administrator Tools] of Web Image Monitor.

Default: [Normal]

- Sooner

  Low toner level notification will be made when the number of pages that can be printed with the remaining toner is approximately 300.

- Normal

  Low toner level notification will be made when the number of pages that can be printed with the remaining toner is approximately 200.

- Later

  Low toner level notification will be made when the number of pages that can be printed with the remaining toner is approximately 100.

Tray Paper Settings

- Paper Size: Tray 1

  Specifies the paper size for Tray 1.

  Default: [A4]

  - A4, B5 JIS, A5, B6 JIS, A6, 8 1/2 × 14, 8 1/2 × 11, 5 1/2 × 8 1/2, 7 1/4 × 10 1/2, 8 × 13, 8 1/2 × 13, 8 1/4 × 13, 16K, 4 1/8 × 9 1/2, 3 7/8 × 7 1/2, C5 Env, C6 Env, DL Env, Custom Size

- Paper Size: Tray 2

  Specifies the paper size for Tray 2.

  This setting appears only when the optional paper feed unit is installed.

  Default: [A4]

  - A4, 8 1/2 × 11

- Paper Size: Bypass Tray

  Specifies the paper size for bypass tray.

  Default: [A4]

  - A4, B5 JIS, A5, B6 JIS, A6, 8 1/2 × 14, 8 1/2 × 11, 5 1/2 × 8 1/2, 7 1/4 × 10 1/2, 8 × 13, 8 1/2 × 13, 8 1/4 × 13, 16K, 4 1/8 × 9 1/2, 3 7/8 × 7 1/2, C5 Env, C6 Env, DL Env, Custom Size

- Paper Type: Tray 1

  Specifies the paper type for Tray 1.

  Default: [Middle Thick Paper]

  - Thin Paper, Plain Paper, Middle Thick Paper, Thick Paper 1, Recycled Paper, Color Paper, Letterhead, Preprinted Paper, Prepunched Paper, Label Paper, Bond Paper, Cardstock, Envelop, Thick Paper 2

- Paper Type: Tray 2

  Specifies the paper type for Tray 2.

  This setting appears only when the optional paper feed unit is installed.

  Default: [Middle Thick Paper]

  - Thin Paper, Plain Paper, Middle Thick Paper, Thick Paper 1, Recycled Paper, Color Paper, Letterhead, Preprinted Paper, Prepunched Paper

- Paper Type: Bypass Tray

  Specifies the paper type for bypass tray.

  Default: [Middle Thick Paper]

- Thin Paper, Plain Paper, Middle Thick Paper, Thick Paper 1, Recycled Paper, Color Paper, Letterhead, Prepunched Paper, Label Paper, Bond Paper, Cardstock, Envelope, Thick Paper 2

- Tray1 Priority

  Specifies how print jobs using Tray 1 are handled.

  Default: [Machine Setting(s)]

  - Machine Setting(s)

    The paper settings configured on the machine's control panel are applied to all print jobs. An error occurs when the paper settings specified by the printer driver or the print command do not match the machine's settings.

  - Driver/Command

    When executing a print job specifying the paper tray, the paper settings specified in the printer driver or in the print command are applied regardless of the machine's settings.

- Bypass Tray Priority

  Specifies how print jobs using the bypass tray are handled.

  Default: [Machine Setting(s)]

  - Machine Setting(s)

    The paper settings configured on the machine's control panel are applied to all print jobs. An error occurs when the paper settings specified by the printer driver or the print command do not match the machine's settings.

  - Driver/Command

    When executing a print job specifying the paper tray, the paper settings specified in the printer driver or in the print command are applied regardless of the machine's settings.

  - Any Size/Type

    Printing proceeds even if the paper size/type settings of the machine and printer driver do not match. However, if the paper is too small for the print job, the printed image will be cropped.

  - Any Custom Size/Type

    The machine prints custom size print jobs according to the printer driver’s settings and prints standard size print jobs according to the machine’s settings.

    For custom size print jobs, printing proceeds even if the paper size/type settings of the machine and printer driver do not match. However, if the paper is too small for the print job, the printed image will be cropped.

    For standard size print jobs, an error will occur if the paper size/type settings of the machine and printer driver do not match.

- Paper Tray Priority

  Specifies the tray that the machine uses first for print jobs from Tray 1 or Tray 2.

If multiple trays contain valid paper, the first tray the machine finds will be used for printing; when that tray runs out of paper, the machine automatically switches to the next tray to continue printing.

If Tray 2 is not installed, [Tray 2] does not appear.

Default: [Tray 1]

- Printer

  If automatic tray selection is specified for the print job and both tray 1 and tray 2 contain paper that matches the print job, the machine starts to print from the specified tray.

  - Tray 1
  - Tray 2

Printing Lists/Reports

Printing the Maintenance Page

1. Press the [菜单] key.

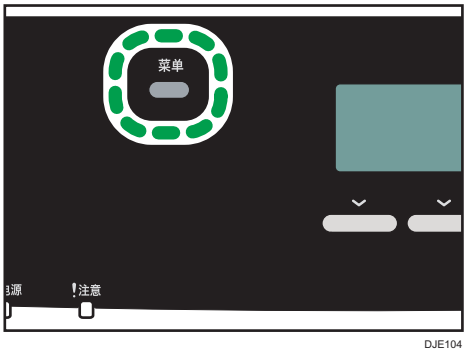

DJE104

2. Press the [▲] or [▼] key to select [Print List/Report], and then press the [OK] key.
3. Press the [▲] or [▼] key to select [Maintenance Page], and then press the [OK] key.
4. Press [Yes] in the confirmation screen.

Types of Lists/Reports

Note

- Reports will be printed on A4 or Letter size paper. Load one of these sizes of paper into the tray before printing reports.

Maintenance Page

Prints the maintenance page.

Printer Features Settings

List/Test Print

Prints lists showing configurations on the machine.

The lists will be printed using the tray set for [Printer] under [Paper Tray Priority] in tray paper settings on A4 or Letter size paper.

- Config. Page

  Prints general information and the current configurations of the machine.

- Test Page

  Prints a test page for checking the single-sided printing condition. The test page contains network settings.

- PCL Font List

  Prints installed PCL font list.

- PS Font List

  Prints installed PostScript font list.

System

- Copies

  Sets the machine to print the specified number of sets.

  This setting is disabled if the number of pages to print is specified by the printer driver.

  Default: **1**

  - 1 to 999

- Sub Paper Size

  Sets the machine to print onto paper of another size if the specified paper is not loaded in any tray. Alternative sizes are preset to A4 and Letter.

  Default: [Off]

  - Auto
  - Off

- Default Page Size

  Specifies the paper size to be used when the paper size is not specified in the print job.

  Default: [A4]

  - A4, B5 JIS, A5, B6 JIS, A6, 8 1/2 × 14, 8 1/2 × 11, 5 1/2 × 8 1/2, 7 1/4 × 10 1/2, 8 × 13, 8 1/2 × 13, 8 1/4 × 13, 16K, 4 1/8 × 9 1/2, 3 7/8 × 7 1/2, C5 Env, C6 Env, DL Env

- Duplex

Sets the machine to print on both sides of paper according to the specified binding method.

Default: [None]

- None
- Long Edge Bind
- Short Edge Bind

- Blank Page Print

  Sets the machine to print blank pages.

  When cover sheet printing is enabled from the printer driver, cover sheets are inserted even if you select [Off].

  Note that this setting has lower priority than the printer driver's blank page setting.

  Default: [On]

  - On
  - Off

- B&W Page Detect

  Sets the machine to print all monochrome pages in monochrome mode even if color printing is specified.

  Default: [On]

  - On
  - Off

- Print Error Report

  Sets the machine to print an error page when the machine detects a printer or memory error.

  Default: [Off]

  - On
  - Off

PCL Menu

Specifies conditions when using PCL for printing.

- Orientation

  Specifies the page orientation.

  Default: [Portrait]

  - Portrait
  - Landscape

- Form Lines

  Specifies the number of lines per page between 5 and 128.

  Default: [64]

- Font Number

  Specifies the ID of the default font you want to use between 0 and 89.

  Default: **0**

- Point Size

  Specifies the point size you want to use for the default font between 4.00 and 999.75 in 0.25 increments.

  Default: **12.00** points

- Font Pitch

  Specifies the number of characters per inch you want to use for the default font between 0.44 and 99.99 in 0.01 increments.

  This setting is effective only for fixed-space fonts.

  Default: **10.00** pitch

- Symbol Set

  Specifies the character set for the default font. The following sets are available:

  Default: [PC-8]

  - Roman-8, Roman-9, ISO L1, ISO L2, ISO L5, PC-8, PC-8 D/N, PC-850, PC-852, PC-858, PC8-TK, Win L1, Win L2, Win L5, Desktop, PS Text, VN Intl, VN US, MS Publ, Math-8, PS Math, VN Math, Pifont, Legal, ISO 4, ISO 6, ISO 11, ISO 15, ISO 17, ISO 21, ISO 60, ISO 69, Win 3.0, MC Text, ISO L6, ISO L9, PC-775, PC-1004, Win Baltic

- Courier Font

  Specifies a courier-type font.

  Default: [Regular]

  - Regular
  - Dark

- Ext. A4 Width

  Sets the machine to extend the width of the printable area of A4 size paper, reducing side margin width.

  Default: [Off]

  - On
  - Off

- Append CR to LF

  Sets the machine to append a CR code to each LF code to print text data clearly.

  Default: [Off]

  - On

- Off

- Resolution

  Specifies the print resolution in dots per inch.

  Default: [600 × 600 1bit]

  - 600 × 600 1bit
  - 600 × 600 2bit
  - 600 × 600 4bit

PS Menu

Specifies conditions when using PostScript for printing.

- Resolution

  Specifies the print resolution in dots per inch.

  Default: [600 × 600 1bit]

  - 600 × 600 1bit
  - 600 × 600 2bit
  - 600 × 600 4bit

- Color Profile

  Specifies the color profile.

  Default: [Solid Color]

  - Solid Color
  - Presentation
  - Photographic
  - Off

Network Settings

Important

- **Depending on the settings you change, the machine might need to be restarted.**

Ethernet

- MAC Address

  Displays the machine's MAC address.

- Ethernet Speed

  Displays the current Ethernet speed setting.

  - 100Mbps Full Duplex
  - 100Mbps Half Duplex
  - 10Mbps Full Duplex
  - 10Mbps Half Duplex
  - Ethernet Unavailable

    Appears when a network cable is not connected.

- Set Ethernet Speed

  Specifies the speed for Ethernet communication. Select a speed that matches your network environment.

  For most networks, the default setting is the optimum setting.

  Default: [Auto Select]

  - Auto Select
  - 100Mbps Full Duplex
  - 100Mbps Half Duplex
  - 10Mbps Full Duplex
  - 10Mbps Half Duplex

Wi-Fi Configuration

- Wi-Fi

  Select whether to enable or disable Wireless LAN.

  Default: [Inactive]

  - Inactive
  - Active

  If [Inactive] is set, [Wi-Fi Status], [MAC Address], [Current Connection], [Setup Wizard], and [WPS] are not displayed.

- Wi-Fi Status

Displays the current connection status.

- MAC Address

  Displays the machine's MAC address.

- Current Connection

  Displays detailed information about the connection, such as the SSID and the wireless signal strength.

- Setup Wizard

  Displays the procedure for manually connecting to a wireless LAN. It leads you step-by-step through configuring the settings for connecting with a wireless LAN.

- WPS

  Connects with one touch using WPS (Wi-Fi Protected Setup). For details, see Wi-Fi Settings Guide.

IPv4 Configuration

- DHCP

  Sets the machine to receive its IPv4 address, subnet mask, and default gateway address automatically from a DHCP server.

  Default: [Active]

  - Inactive
  - Active

- IP Address

  Specifies the machine's IPv4 address when DHCP is not used.

  Use this menu to check the current IP address when DHCP is used.

  Default: XXX.XXX.XXX.XXX

  The numbers represented by "X" vary according to your network environment.

- Subnet Mask

  Specifies the machine's subnet mask when DHCP is not used.

  Use this menu to check the current subnet mask when DHCP is used.

  Default: XXX.XXX.XXX.XXX

  The numbers represented by "X" vary according to your network environment.

- Gateway Address

  Specifies the machine's default gateway address when DHCP is not used.

  Use this menu to check the current default gateway address when DHCP is used.

  Default: XXX.XXX.XXX.XXX

  The numbers represented by "X" vary according to your network environment.

- IP Address Method

  Displays the IP address acquisition method.

  - IP Not Ready
  - DHCP
  - Manual Config.
  - Default IP

IPv6 Configuration

- IPv6

  Select whether to enable or disable IPv6.

  Default: [Active]

  - Active
  - Inactive

- DHCP

  Sets the machine to receive its IPv6 address from a DHCP server.

  Default: [Inactive]

  - Active
  - Inactive

- IP Address (DHCP)

  Displays the IPv6 address obtained from a DHCP server.

- Manual Config. Address

  - Manual Config. Address

    Specifies the machine's IPv6 address when DHCP is not used. Can contain up to 39 characters.

  - Prefix Length

    Specifies the prefix length, using a value between 0 and 128.

  - Gateway Address

    Specifies the IPv6 address of the default gateway. Can contain up to 39 characters.

- Stateless Address

  Displays the IPv6 stateless addresses obtained from a Router Advertisement.

  - Stateless Address 1
  - Stateless Address 2
  - Stateless Address 3
  - Stateless Address 4

- Link-local Address

  Displays the IPv6 link local address.

Note

- Contact your network administrator for information about the network configuration.

Administrator Settings

System Auto Reset Timer

Sets the machine to return to the printer mode.

Default: [On] (1 min.)

- On (30 sec., 1 min., 2 min., 3 min., 5 min., 10 min.)
- Off

Energy Saver Mode

Sets the machine to enter Energy Saver mode, Energy Saver mode 1 or Energy Saver mode 2, to reduce power consumption. The machine recovers from Energy Saver mode when it receives a print job, or when any key on the machine is pressed.

- EnergySaverMode 1

  The machine enters Energy Saver mode 1 if the machine has been idle for about 30 seconds. It takes less time to recover from Energy Saver mode 1 than from power-off state or Energy Saver mode 2, but power consumption is higher in Energy Saver mode 1 than in Energy Saver mode 2.

  Default: [Off]

  - Off
  - On (30 seconds)

- EnergySaverMode 2

  The machine enters Energy Saver mode 2 after the period of time specified for this setting is passed. The machine consumes less power in Energy Saver mode 2 than in Energy Saver mode 1, but it takes longer to recover from Energy Saver mode 2 than from Energy Saver mode 1.

  Default: [On] (1 minute)

  - On (1 to 240 minutes)
  - Off

Language

Specifies the language used on the screen and in reports.

Reset Settings

Be sure not to clear the settings by mistake.

- Reset All Settings

  Resets the machine's settings to their defaults except the following: language for the screen and network settings.

  Press [Yes] to execute. Press [No] to exit to the previous level of the menu tree without clearing the settings.

- Reset Network Settings

  Resets the network settings to their defaults.

  Press [Yes] to execute. Press [No] to exit to the previous level of the menu tree without clearing the settings.

Admin. Tools Lock

Specifies a four-digit password for accessing the [Address Book], [Network Settings], and [Admin. Tools] menus.

Do not forget this password.

- On (0000 to 9999)
- Off

IPsec

Selects whether to enable or disable IPsec.

This function appears only when a password is specified under [Admin. Tools Lock].

Default: [Inactive]

- Active
- Inactive

5. Configuring the Machine Using Web Image Monitor

Using Web Image Monitor

Note

- To operate the machine via Web Image Monitor, you must first configure the machine's TCP/IP or wireless LAN settings. For details, see page 87 "Network Settings" or see page 22 "Configuring Network Settings".

Important

- **Some items can also be configured using the control panel.**

Available operations

The following operations can be performed remotely using Web Image Monitor on a computer:

- Displaying the machine's status or settings
- Configuring the machine's settings
- Configuring the user restriction settings
- Configuring the network settings
- Configuring the IPsec settings
- Printing reports
- Setting the administrator password
- Resetting the machine's configuration to the factory default
- Creating backup files of the machine's configuration
- Restoring the machine's configuration from backup files
- Configuring the machine's Energy Saver mode setting

Supported Web browsers

- Windows:

  Internet Explorer 6.0- 11.0
- Mac OS X:

  Safari 3.0- 6.0

Displaying Top Page

When you access the machine using Web Image Monitor, the top page appears in your browser's window.

1. **Launch the Web browser.**
2. **In the Web browser's address bar, enter "http://(machine's IP address)/" to access the machine.**

   If a DNS or WINS server is used and the machine's host name has been specified, you can enter the host name instead of the IP address.

   The top page of Web Image Monitor appears.

Top page

Every Web Image Monitor page is divided into the following areas:

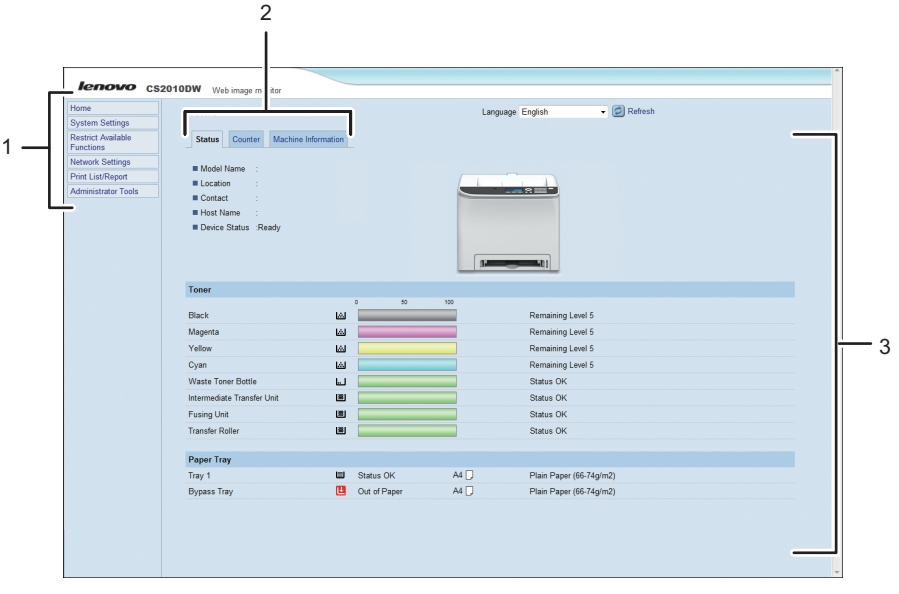

DJE145

1. Menu area

   Clicking a menu shows its contents in the main area.

2. Tab area

   Contains tabs for switching between information and settings you want to see or configure.

3. Main area

   Displays the contents of the item selected in the menu area.

Information in the main area is not automatically updated. Click [Refresh] at the upper-right in the main area to update the information. Click the Web browser's [Refresh] button to refresh the entire browser screen.

Note

- If you use an older version of a supported Web browser or the Web browser has JavaScript and cookies disabled, display and operation problems may occur.
- If you are using a proxy server, configure the Web browser settings as necessary. For details about the settings, contact your network administrator.
- The previous page may not appear even if the back button of the Web browser is clicked. If this happens, click the refresh button of the Web browser.

Changing the Interface Language

Select the desired interface language from the [Language] list.

Checking the System Information

Click [Home] to display the main page of Web Image Monitor. You can check the current system information on this page.

This page contains three tabs: [Status], [Counter], and [Machine Information].

Status Tab

Item	Description
Model Name	Shows the name of the machine.
Location	Shows the location of the machine as registered on the [SNMP] page.
Contact	Shows the contact information of the machine as registered on the [SNMP] page.
Host Name	Shows the host name specified in [Host Name] on the [DNS] page.
Device Status	Shows the current messages on the machine's display.

Toner

Item	Description
Black	Shows the amount of black toner remaining.
Magenta	Shows the amount of magenta toner remaining.
Yellow	Shows the amount of yellow toner remaining.
Cyan	Shows the amount of cyan toner remaining.
Waste Toner Bottle	Shows the remaining life of the waste toner bottle, as "Status OK", "Almost Full" or "Full".
Intermediate Transfer Unit	Shows the remaining life of the intermediate transfer unit, as "Status OK", "Replacement Required Soon" or "Replacement Required". For replacing, contact your sales or service representative.
Fusing Unit	Shows the remaining life of the fusing unit, as "Status OK", "Replacement Required Soon" or "Replacement Required". For replacing, contact your sales or service representative.

Item	Description
Transfer Roller	Shows the remaining life of the transfer roller, as "Status OK", "Replacement Required Soon" or "Replacement Required". For replacing, contact your sales or service representative.

Paper Tray

Item	Description
Tray 1	Shows the current state and paper size/type setting of Tray 1.
Tray 2	Shows the current state and paper size/type setting of Tray 2.
Bypass Tray	Shows the current state and paper size/type setting of the bypass tray.

Note

- If a non-genuine print cartridge is installed, toner life cannot be reliably indicated.
- The information about Tray 2 appears only when it is installed.

Counter Tab

Machine Counter

Item	Description
Machine Counter	Shows the following for pages printed, including lists/reports: • Total number of pages • Number of color pages • Number of black-and-white pages
Black	Shows the following for pages printed, including lists/reports: • Accumulated value of black toner A4 page coverage (in percent) • Accumulated value of black toner consumption (converted into fully-covered A4 pages)
Cyan	Shows the following for pages printed, including lists/reports: • Accumulated value of cyan toner A4 page coverage (in percent) • Accumulated value of cyan toner consumption (converted into fully-covered A4 pages)

Item	Description
Magenta	Shows the following for pages printed, including lists/reports: • Accumulated value of magenta toner A4 page coverage (in percent) • Accumulated value of magenta toner consumption (converted into fully-covered A4 pages)
Yellow	Shows the following for pages printed, including lists/reports: • Accumulated value of yellow toner A4 page coverage (in percent) • Accumulated value of yellow toner consumption (converted into fully-covered A4 pages)

Economy Color Prints

Item	Description
Economy Color Prints (Color)	Shows the number of pages printed in Economy Color Printing mode using the printer function.
Black	Shows the following for pages printed in Economy Color Printing mode using the printer function: • Accumulated value of black toner A4 page coverage (in percent) • Accumulated value of black toner consumption (converted into fully-covered A4 pages)
Cyan	Shows the following for pages printed in Economy Color Printing mode using the printer function: • Accumulated value of cyan toner A4 page coverage (in percent) • Accumulated value of cyan toner consumption (converted into fully-covered A4 pages)
Magenta	Shows the following for pages printed in Economy Color Printing mode using the printer function: • Accumulated value of magenta toner A4 page coverage (in percent) • Accumulated value of magenta toner consumption (converted into fully-covered A4 pages)
Yellow	Shows the following for pages printed in Economy Color Printing mode using the printer function: • Accumulated value of yellow toner A4 page coverage (in percent) • Accumulated value of yellow toner consumption (converted into fully-covered A4 pages)

Duplex

Item	Description
Duplex Total Page	Shows the total number of sheets printed on both sides.

Note

- A sheet printed on both sides counts as two printed pages.

Machine Information Tab

Machine Information

Item	Description
Firmware Version	Shows the version of firmware installed on the machine.
Engine FW Version	Shows the version of firmware for the machine engine.
PCL Version	Shows the version of the PCL interpreter.
PS Version	Shows the version of the PS interpreter.
Machine ID	Shows the identification number of the machine.
Total Memory	Shows the total memory installed on the machine.

Configuring the System Settings

Click [System Settings] to display the page for configuring the system settings.

This page contains the following tabs: [Tray Paper Settings], [B&W Print Priority] and [I/O Timeout].

Tray Paper Settings Tab

Tray 1

Item	Description
Paper Size	Select the paper size for Tray 1 from the following: A4, B5 JIS, A5, B6 JIS, A6, 8 1/2 × 14, 8 1/2 × 11, 5 1/2 × 8 1/2, 7 1/4 × 10 1/2, 8 × 13, 8 1/2 × 13, 8 1/4 × 13, 16K, 4 1/8 × 9 1/2, 3 7/8 × 7 1/2, C5 Env, C6 Env, DL Env, Custom Size
Paper Type	Select the paper type for Tray 1 from the following: Thin Paper (60-65g/m^2), Plain Paper (66-74g/m^2), Middle Thick Paper (75-90g/m^2), Thick Paper 1 (91-105g/m^2), Recycled Paper, Color Paper, Letterhead, Preprinted Paper, Prepunched Paper, Label Paper, Bond Paper, Cardstock, Envelope, Thick Paper 2 (106-160g/m^2)

Tray 2

Item	Description
Paper Size	Select the paper size for Tray 2 from the following: A4, 8 1/2 × 11
Paper Type	Select the paper type for Tray 2 from the following: Thin Paper (60-65g/m^2), Plain Paper (66-74g/m^2), Middle Thick Paper (75-90g/m^2), Thick Paper 1 (91-105g/m^2), Recycled Paper, Color Paper, Letterhead, Preprinted Paper, Prepunched Paper

Bypass Tray

Item	Description
Paper Size	Select the paper size for the bypass tray from the following: A4, B5 JIS, A5, B6 JIS, A6, 8 1/2 × 14, 8 1/2 × 11, 5 1/2 × 8 1/2, 7 1/4 × 10 1/2, 8 × 13, 8 1/2 × 13, 8 1/4 × 13, 16K, 4 1/8 × 9 1/2, 3 7/8 × 7 1/2, C5 Env, C6 Env, DL Env, Custom Size

Item	Description
Paper Type	Select the paper type for the bypass tray from the following: Thin Paper (60-65g/m^2), Plain Paper (66-74g/m^2), Middle Thick Paper (75-90g/m^2), Thick Paper 1 (91-105g/m^2), Recycled Paper, Color Paper, Letterhead, Prepunched Paper, Label Paper, Bond Paper, Cardstock, Envelope, Thick Paper 2 (106-160g/m^2)

Priority Tray

Item	Description
Priority Tray	Select the tray that the printer uses first for printer jobs from Tray 1 or Tray 2. If automatic tray selection is specified for the print job and both Tray 1 and Tray 2 contain paper that matches the print job, the printer starts to print from the specified tray. If that tray runs out of paper, the printer automatically switches to the other tray to continue printing.

Tray 1 Priority

Item	Description
Tray 1 Priority	Select how print jobs using the Tray 1 are handled. • System Settings The paper settings configured on the machine's control panel are applied to all print jobs. An error occurs when the paper settings specified by the printer driver or the print command do not match the machine's settings. • Driver/Command When executing a print job specifying the paper tray, the paper settings specified in the printer driver or in the print command are applied regardless of the machine's settings.

Bypass Tray Setting Priority

Item	Description
Bypass Tray Setting Priority	Select how print jobs using the bypass tray are handled. • System Settings The paper settings configured on the machine's control panel are applied to all print jobs. An error occurs when the paper settings specified by the printer driver or the print command do not match the machine's settings. • Driver/Command When executing a print job specifying the paper tray, the paper settings specified in the printer driver or in the print command are applied regardless of the machine's settings. • Any Size/Type Printing proceeds even if the paper size/type settings of the machine and printer driver do not match, but if the paper is too small for the print job, the printed image will be cropped. • Any Custom Size/Type The machine prints custom size print jobs according to the printer driver's settings and prints standard size print jobs according to the machine's settings. For custom size print jobs, printing proceeds even if the paper size/type settings of the machine and printer driver do not match, but if the paper is too small for the print job, the printed image will be cropped. For standard size print jobs, an error will occur if the paper size/type settings of the machine and printer driver do not match.

Note

- The information about Tray 2 appears only when it is installed.

I/O Timeout Tab

I/O Timeout

Item	Description
Fixed USB Port	Specifies whether the same printer can be used for multiple machines or not under USB connection. If this setting is enabled, the same printer driver you have installed in your computer can be used with any machine other than the one originally used for installation, if the machine is of the same model. If disabled, you must install the printer driver separately for individual machines, because the machine other than the original will be recognized as a new device upon USB connection.
Locked Print Timeout (seconds)	Specifies how many seconds the machine holds a new Locked Print file, when the machine cannot store any more Locked Print files (0 to 300 seconds). Within this time, you can print or delete the new Locked Print file. You can also print or delete an existing Locked Print file so that the new Locked Print file can be stored in the machine.

Black-and-White Print Priority Tab

B&W Print Priority

Item	Description
B&W Print Priority	Enable this setting to suppress the consumption of color toner when printing black-and-white pages. Also, amount of color toner consumed during warm-up time for maintenance will also be lowered.

Restricting Machine Functions According to User

You can set the machine to require a user code when someone tries to use certain machine functions. For details about configuring the user restriction settings, see page 30 "Restricting Machine Functions According to User".

Important

- **To print jobs that require authentication you can use only the PCL printer driver. Printing such jobs from the PostScript 3 printer driver is not possible.**

Using Web Image Monitor, enable user restriction for all or some of the functions listed below, and then register users who can use those functions.

- PictBridge printing
- Printing (both color and black-and-white)
- Color printing

For each user, you can specify which functions are available upon authentication. Up to 30 users can be registered.

Note

- For details about configuring the user restriction settings, see page 30 "Restricting Machine Functions According to User".

Configuring the Network Settings

Click [Network Settings] to display the page for configuring the network settings.

This page contains the following tabs: [Network Status], [IPv6 Configuration], [Network Application], [DNS], [Auto E-mail Notification], [SNMP], [SMTP], [POP3], and [Wireless].

Important

- **Depending on the settings you change, the machine might need to be restarted.**

Network Status Tab

General Status

Item	Description
Ethernet Speed	Shows the type and speed of the network connection.
IPP Printer Name	Shows the name used to identify the machine on the network.
Network Version	Shows the version of the machine's network module (a part of the machine firmware).
Ethernet MAC Address	Shows the Ethernet MAC address of the machine.
Active Interface	Shows the active communication method.

TCP/IP Status

Item	Description
DHCP	Select whether the machine should receive a dynamic IPv4 address automatically using DHCP. To use DHCP, select [Active]. When enabled, the items below cannot be configured.
IP Address	Enter the IPv4 address for the machine.
Subnet Mask	Enter the subnet mask of the network.
Gateway	Enter the IPv4 address of the network gateway.

IPv6 Configuration Tab

IPv6

Item	Description
IPv6	Select whether to enable or disable IPv6. You cannot disable IPv6 using Web Image Monitor if the machine is currently in use in an IPv6 environment. In this case, use the control panel to disable [IPv6] under network settings. When disabled, [DHCP], [Manual Configuration Address], [Prefix Length], and [Gateway Address] below cannot be configured.

IPv6 Address

Item	Description
DHCP	Select whether or not the machine obtains its IPv6 address from a DHCP server.
IP Address (DHCP)	Displays the IPv6 address obtained from the DHCP server when [DHCP] is set to [Active].
Stateless Address	Displays up to four stateless auto addresses.
Gateway Address	Displays the machine's default gateway address.
Link-local Address	Displays the link local address of the machine. The link local address is an address that is valid only inside the local network (local segment).
Manual Configuration Address	Enter the machine's IPv6 address. Can contain up to 39 characters.
Prefix Length	Enter the prefix length, using a value between 0 and 128.
Gateway Address	Enter the default gateway's IPv6 address. Can contain up to 39 characters.

Network Application Tab

Network Print Setting

Item	Description
IPP	Select to enable network printing using Internet Print Protocol (via TCP port 631/80).

Item	Description
FTP	Select to enable network printing using an embedded FTP server in the machine (via TCP port 20/21).
RAW	Select to enable network raw printing.
Port No.	Enter the TCP port number to use for raw printing. The valid range is 1024 to 65535, except 53550 and 49999 (default is 9100).
LPR	Select to enable network printing using LPR/LPD (via TCP port 515).

mDNS Setting

Item	Description
mDNS	Select to enable Multicast DNS (via UDP port 5353). If disabled, the item below cannot be configured.
Printer Name	Enter the name of the machine. Can contain up to 32 characters.

DNS Tab

DNS

Item	Description
DNS Method	Select whether to specify domain name servers manually or receive DNS information from the network automatically. When set to [Auto-Obtain (DHCP)], [Primary DNS Server], [Secondary DNS Server], and [Domain Name] below become unavailable.
Primary DNS Server	Enter the IPv4 address of the primary DNS.
Secondary DNS Server	Enter the IPv4 address of the secondary DNS.
Domain Name	Enter the IPv4 domain name for the machine. Can contain up to 32 characters.
IPv6 DNS Method	Select whether to specify the domain server manually or have the machine obtain its DNS information automatically. When set to [Auto-Obtain (DHCP)], [Primary IPv6 DNS Server], [Secondary IPv6 DNS Server], and [IPv6 Domain Name] below become unavailable.

Item	Description
Primary IPv6 DNS Server	Enter the IPv6 address of the primary IPv6 DNS server. Can contain up to 39 characters.
Secondary IPv6 DNS Server	Enter the IPv6 address of the secondary IPv6 DNS server. Can contain up to 39 characters.
IPv6 Domain Name	Enter the IPv6 domain name of the machine. Can contain up to 32 characters.
DNS Resolve Priority	Select whether to give priority to IPv4 or IPv6 for DNS name resolution.
DNS Timeout (seconds)	Enter the number of seconds the machine waits before considering a DNS request to have timed out (1 to 999 seconds).
Host Name	Enter a host name for the machine. Can contain up to 15 characters.

Auto E-mail Notification Tab

E-mail Notification 1/E-mail Notification 2

Item	Description
Display Name	Enter a sender name for notification e-mail. Can contain up to 32 characters.
E-mail Address	Enter the address of the recipient of the alert email. Can contain up to 64 characters.
Paper Misfeed	Select to send an alert e-mail to the specified address if a paper jam occurs.
Out of Paper	Select to send an alert e-mail to the specified address if paper runs out.
Toner Almost Empty	Select to send an alert e-mail to the specified address if toner becomes low.
Call Service	Select to send an alert e-mail to the specified address if the machine requires servicing.
Out of Toner	Select to send an alert e-mail to the specified address if toner runs out.
Cover Open	Select to send an alert e-mail to the specified address if a cover is open.

SNMP Tab

SNMP

Item	Description
SNMP	Select whether to enable the machine to use SNMP services.

Trap

Item	Description
Target Trap	Select whether to enable the machine to send traps to the management host (NMS). When disabled, [SNMP Management Host 1] and [SNMP Management Host 2] below become unavailable.
SNMP Management Host 1	Enter the IP address or host name of a management host. Can contain up to 64 characters.
SNMP Management Host 2	Enter the IP address or host name of a management host. Can contain up to 64 characters.

Community

Item	Description
Get Community	Enter the community name to use for authentication of Get requests. Can contain up to 32 characters.
Trap Community	Enter the community name to use for authentication of Trap requests. Can contain up to 32 characters.

System

Item	Description
Location	Enter the location of the machine. The location entered here is displayed on the main page. Can contain up to 64 characters.
Contact	Enter the contact information of the machine. The contact information entered here is displayed on the main page. Can contain up to 64 characters.

SMTP Tab

SMTP

Item	Description
Primary SMTP Server	Enter the IP address or host name of the SMTP/POP3 server. Can contain up to 64 characters.
Port No.	Enter the port number for SMTP (1 to 65535).
Authentication Method	Select an authentication method from the following: [Anonymous]: The user name and password are not necessary. [SMTP]: The machine supports NTLM and LOGIN authentication. [POP before SMTP]: The POP3 server is used for authentication. When sending e-mails to an SMTP server, you can enhance the SMTP server security level by connecting to the POP server for authentication.
User Name	Enter the user name for logging in to the SMTP server. Can contain up to 32 characters.
Password	Enter the password for logging in to the SMTP server. Can contain up to 32 characters.
Device E-mail Address	Enter the machine's e-mail address. This address is used as the sender's address of e-mail messages sent from this machine, such as notification e-mails. Can contain up to 64 characters.
Server Timeout (seconds)	Enter the number of seconds the machine waits before considering an SMTP operation to have timed out (1 to 999).

POP3 Tab

POP3 Settings

Item	Description
POP3 Server	Enter the IP address or host name of the POP3 server for e-mail reception. The POP3 server specified here will be used for [POP before SMTP]. Can contain up to 64 characters.
User Account	Enter the user name for logging in to the POP3 server. Can contain up to 32 characters.

Item	Description
User Password	Enter the password for logging in to the POP3 server. Can contain up to 32 characters.
Authentication	Select an authentication method from the following: [None]: Password will not be encrypted. [APOP Authentication]: Password will be encrypted. [Auto]: Password will be encrypted or not encrypted according to the POP3 server's settings.

Wireless Tab

Wireless LAN Status

Item	Description
Wireless LAN Status	Displays the status of the connection to the wireless LAN.
MAC Address	Displays the MAC address.
Communication Mode	Displays the communication mode that the machine is connecting in.
SSID	Displays the SSID of the access point that the machine is connected to.
Channel	Displays the channel information of the current wireless LAN settings if [Ad-Hoc] is selected for [Communication Mode].
Wireless Signal Status	Displays the strength of the wireless signal that is being received.
Wireless	Specifies whether or not to use the wireless LAN.

Wireless LAN Settings

Item	Description
SSID	Enter the SSID of the access point. The SSID can contain up to 32 characters. When you click [Scan List], a list of available access points is displayed. You can select the SSID from the list.

Item	Description
Communication Mode	Select the mode to connect in. If the machine will be connected to a wireless router or access point, select [Infrastructure]. If the machine will be connected to a device equipped with a wireless LAN directly, select [Ad-Hoc].
Ad-Hoc Channel	If [Ad-Hoc] is selected for [Communication Mode], select a channel.
Authentication	Select an authentication method. If [Ad-Hoc] is selected for [Communication Mode], you can select only [Open System] and [Shared Key].
Encryption	Select an encryption method. If [Ad-Hoc] is selected for [Communication Mode], you can select only [None] and [WEP].
WPA Passphrase	If [WPA2-PSK] or [Mixed Mode WPA/WPA2] is selected for [Authentication], enter the WPA encryption key.
WEP Key Length	If [WEP] is selected for [Encryption], select 64 bits or 128 bits for the length of the encryption key.
WEP Transmit Key ID	Select an ID number to identify each WEP key in case multiple WEP connections are configured.
WEP Key Format	Select a format for entering the WEP key.
WEP Key	Enter the WEP key. The number and type of characters you can enter vary depending on the length and format selected for the key. See the following: • WEP key length: [64bit], Format: [Hexadecimal] WEP key max length: 10 characters (0-9, A-F, a-f) • WEP key length: [64bit], Format: [ASCII] WEP key max length: 5 characters (0x20-0x7e) • WEP key length: [128bit], Format: [Hexadecimal] WEP key max length: 26 characters (0-9, A-F, a-f) • WEP key length: [128bit], Format: [ASCII] WEP key max length: 13 characters (0x20-0x7e)

Note

- If you are configuring the connection settings manually, check the SSID, authentication method, or encryption key of the access point or wireless router in advance.

Configuring the IPsec Settings

Click [IPsec Settings] to display the page for configuring the IPsec settings.

This page contains the following tabs: [IPsec Global Settings] and [IPsec Policy List].

Important

- **This function is available only when an administrator password is specified.**

IPsec Global Settings Tab

Item	Description
IPsec Function	Select whether to enable or disable IPsec.
Default Policy	Select whether to allow for the default IPsec policy.
Broadcast and Multicast Bypass	Select the services that you do not want to apply IPsec from the following: [DHCPv4], [DHCPv6], [SNMP], [mDNS], [NetBIOS], [UDP Port 53550]
All ICMP Bypass	Select whether to apply IPsec to ICMP packets (IPv4 and IPv6) from the following: [Active]: All ICMP packets will be bypassed without IPsec protection. "ping" command (echo request and echo reply) is not encapsulated by IPsec. [Inactive]: Some ICMP message types will be bypassed without IPsec protection.

IPsec Policy List Tab

Item	Description
No.	IPsec policy number.
Name	Displays the name of the IPsec policy.
Address Settings	Displays the IP address filter of the IPsec policy as below: Remote address/Prefix length
Action	Displays the action of the IPsec policy as "Allow", "Drop", or "Require Security".

Item	Description
Status	Displays the status of the IPsec policy as "Active" or "Inactive".

To configure IPsec policies, select the desired IPsec policy, and then click [Change] to open the "IPsec Policy Settings" page. The following settings can be made on the "IPsec Policy Settings" page.

IP Policy Settings

Item	Description
No.	Specify a number between 1 and 10 for the IPsec policy. The number you specify will determine the position of the policy in the IPsec Policy List. Policy searching is performed according to the order of the list. If the number you specify is already assigned to another policy, the policy you are configuring will take the number of the earlier policy, and the earlier policy and any subsequent policies will be renumbered accordingly.
Activity	Select whether to enable or disable the policy.
Name	Enter the name of the policy. Can contain up to 16 characters.
Address Type	Select IPv4 or IPv6 as the type of IP address to be used in IPsec communication.
Local Address	Displays the IP address of this printer.
Remote Address	Enter the IPv4 or IPv6 address of the device with which to communicate. Can contain up to 39 characters.
Prefix Length	Enter the prefix length of the Remote Address, using a value between 1 and 128. If this setting is left blank, "32" (IPv4) or "128" (IPv6) will be automatically selected.
Action	Specify how the IP packets are processed from the following: • [Allow]: IP packets are both sent and received without IPsec applied to them. • [Drop]: IP packets are discarded. • [Require Security]: IPsec is applied to IP packets that are both sent and received. If you have selected [Require Security], you must configure [IPsec Settings] and [IKE Settings].

IPsec Settings

Item	Description
Encapsulation Type	Specify the encapsulation type from the following: • [Transport]: Select this mode to secure only the payload section of each IP packet when communicating with IPsec compliant devices. • [Tunnel]: Select this mode to secure every section of each IP packet. We recommend this type for communication between security gateways (such as VPN devices).
Security Protocol	Select the security protocol from the following: • [AH]: Establishes secure communication that supports authentication only. • [ESP]: Establishes secure communication that supports both authentication and data encryption. • [ESP&AH]: Establishes secure communication that supports both data encryption and authentication of packets, including packet headers. Note that you cannot specify this protocol when [Tunnel] is selected for [Encapsulation Type].
Authentication Algorithm for AH	Specify the authentication algorithm to be applied when [AH] or [ESP&AH] is selected for [Security Protocol] from the following: [MD5], [SHA1]
Encryption Algorithm for ESP	Specify the encryption algorithm to be applied when [ESP] or [ESP&AH] is selected for [Security Protocol] from the following: [None], [DES], [3DES], [AES-128], [AES-192], [AES-256]
Authentication Algorithm for ESP	Specify the authentication algorithm to be applied when [ESP] is selected for [Security Protocol] from the following: [MD5], [SHA1]
Life Time	Specify the life time of the IPsec SA (Security Association) as a time period or data volume. The SA will expire when the time period you specify elapses or the volume of data you specify reaches the volume carried. If you specify both a time period and a data volume, the SA will expire as soon as either is reached, and a new SA will then be obtained by negotiation. To specify the life time of the SA as a time period, enter a number of seconds. To specify the life time of the SA as a data volume, enter a number of KBs.

Item	Description
Key Perfect Forward Secrecy	Select whether to enable or disable PFS (Perfect Forward Secrecy).

IKE Settings

Item	Description
IKE Version	Displays the IKE version.
Encryption Algorithm	Specify the encryption algorithm from the following: [DES], [3DES], [AES-128], [AES-192], [AES-256]
Authentication Algorithm	Specify the authentication algorithm from the following: [MD5], [SHA1]
IKE Life Time	Specify the life time of the ISAKMP SA as a time period. Enter a number of seconds.
IKE Diffie-Hellman Group	Select the IKE Diffie-Hellman Group to be used in the generation of the IKE encryption key from the following: [DH1], [DH2]
Pre-Shared Key	Specify the PSK (Pre-Shared Key) to be used for authentication of a communicating device. Can contain up to 32 characters.
Key Perfect Forward Secrecy	Select whether to enable or disable PFS (Perfect Forward Secrecy).

Printing Lists/Reports

Click [Print List/Report] to display the page for printing reports. Then, select an item and click [Print] to print out information for that item.

Print List/Report

Item	Description
Configuration Page	Prints general information about the machine and its current configuration.
Test Page	Prints a test page for checking the printing condition.
PCL Font List	Prints the current configuration and installed PCL font list.
PS Font List	Prints the current configuration and installed PostScript font list.
Maintenance Page	Prints the maintenance page.

Note

- Reports cannot be printed via Web Image Monitor if other jobs are printing. Before printing reports, confirm that machine is not printing.
- Reports will be printed on A4 or Letter size paper. Load one of these sizes of paper into the tray before printing reports.

Configuring the Administrator Settings

Click [Administrator Tools] to display the page for configuring the administrator settings.

This page contains the following tabs: [Administrator], [Reset Settings], [Backup Setting], [Restore Setting], and [Energy Saver Mode].

Administrator Tab

Administrator Settings

Item	Description
New Password	Enter the new administrator password. Can contain up to 16 characters.
Confirm New Password	Enter the same password again, to confirm.

Reset Settings Tab

Reset Settings

Item	Description
Reset Network Settings	Select to restore settings configured under the [Network Settings] and [Administrator Tools].
Reset Menu Settings	Select to restore settings that are not related to the network to their defaults.
Reset Settings of Available Functions	Select to clear the user restriction settings.
Reset IPsec Settings	Select to clear the IPsec settings.

Note

- [Reset IPsec Settings] appears only when the administrator password is specified.

Backup Setting Tab

Important

- When sending the machine for repair, it is important that you create backup files in advance. The machine's settings are returned to the default after repair.

Backup Setting

Item	Description
Back up Network Settings	Backs up settings configured under the [Network Settings] and [Administrator Tools].
Back up Menu Settings	Backs up settings that are not related to the network.
Back up Settings of Available Functions	Backs up user restriction settings to a file.
Back up IPsec Settings	Backs up the IPsec settings to a file.

Follow the procedure below to create configuration backup files.

1. **Select the radio button for the type of data you wish to back up.**
2. **Enter the administrator password if required.**
3. **Click [OK].**
4. **Click [Save] in the confirmation dialog box.**
5. **Navigate to the location to save the backup file.**
6. **Specify a name for the file, and click [Save].**

Note

- [Back up IPsec Settings] appears only when the administrator password is specified.

Restore Setting Tab

Important

- **When the machine is returned from repair, it is important that you restore the machine's settings from the backup files. The machine's settings are returned to the default after repair.**

Restore Setting

Item	Description
File to Restore	Enter the path and name of the file to restore, or click [Browse...] to select the file.

Follow the procedure below to restore configuration backup files.

1. **Click [Browse...].**
2. **Navigate to the directory containing the backup file to restore.**
3. **Select the backup file, and click [Open].**

4. **Enter the administrator password if required.**
5. **Click [OK].**

Note

- If the settings are not restored successfully, an error message appears. Try again to restore the file completely.

Energy Saver Mode Tab

Energy Saver Mode

Item	Description
Energy Saver Mode 1	Select [Active] to set the machine to enter Energy Saver mode 1 if the machine has been idle for about 30 seconds. It takes less time to recover from Energy Saver mode 1 than from power-off state or Energy Saver mode 2, but power consumption is higher in Energy Saver mode 1 than in Energy Saver mode 2.
Energy Saver Mode 2	Select [Active] to set the machine to enter Energy Saver mode 2 after the period of time specified for [Waiting Time (1 min. - 240 min.)] is passed (1 to 240 minutes). The machine consumes less power in Energy Saver mode 2 than in Energy Saver mode 1, but it takes longer to recover from Energy Saver mode 2 than from Energy Saver mode 1.

Note

- The printer recovers from Energy Saver mode when it receives a print job or when any key on the machine is pressed.

6. Maintaining the Machine

Replacing the Print Cartridge

Important

- Store print cartridge in a cool dark place.
- Actual printable numbers vary depending on image volume and density, number of pages printed at a time, paper type and size, and environmental conditions such as temperature and humidity. Toner quality degrades over time. Early replacement of the print cartridge might be necessary. Therefore, we recommend you always keep a new print cartridge ready.
- For good print quality, the manufacturer recommends that you use genuine toner from the manufacturer.
- The manufacturer shall not be responsible for any damage or expense that might result from the use of parts other than genuine parts from the manufacturer with your office products.
- If you try to print while the message "Replacement Required: Toner Cartridge (XX)" is being displayed, another message "Continue printing?" may appear. If this happens, you can print a few pages by pressing [Yes], although the print quality may be lower. Replace the toner as soon as possible. If the message "Continue printing?" does not appear, replace the toner immediately.

Messages on the screen

- Replace the indicated print cartridge when any of the following messages appear on the screen:

  "Replacement Required: Toner Cartridge" (XX)

  ("XX" indicates the toner color)
- Prepare the indicated print cartridge when any of the following messages appear on the screen:

  "Replace Required Soon: Toner Cartridge" (XX)

  ("XX" indicates the toner color)

Important

- Do not allow paper clips, staples, or other small objects to fall inside the machine.
- Do not expose the print cartridge without its cover to direct sunlight for a long time.
- Do not touch the print cartridge's photo conductor unit.

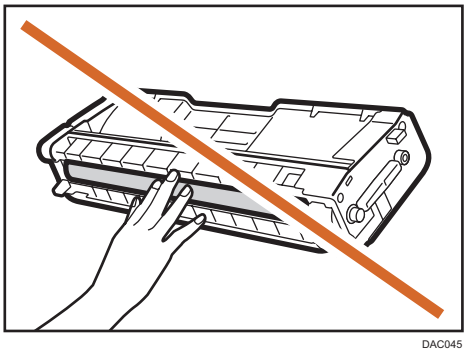

DAC045

- Do not touch the ID chip on the side of the print cartridge as shown below.

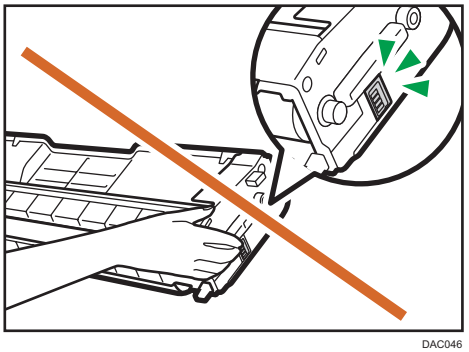

DAC046

- When removing print cartridges, be careful not to touch the laser scanning unit under the upper cover (the position shown by the arrow in the illustration below).

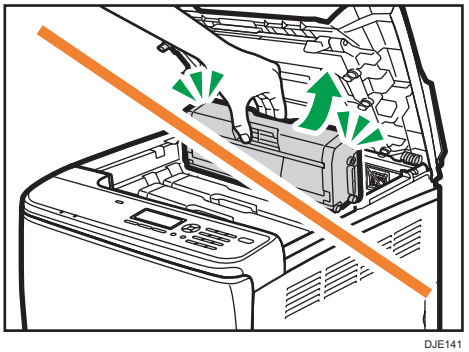

DJE141

- If cyan, magenta, or yellow toner runs out, you can print in black and white using just the black toner. Change the color mode setting to Black and White using the machine's driver.
- If black toner runs out, you cannot print in black and white or color until the black print cartridge is replaced.

1. **Pull up the lever on the top cover, and then carefully raise the top cover.**

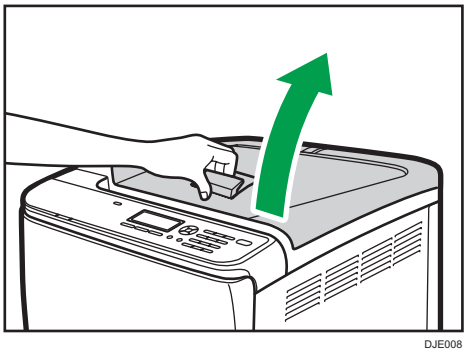

DJE008

2. **Carefully lift out the print cartridge vertically, holding its center.**

   From the rear, the print cartridges are installed in the order of cyan (C), magenta (M), yellow (Y), and black (K).

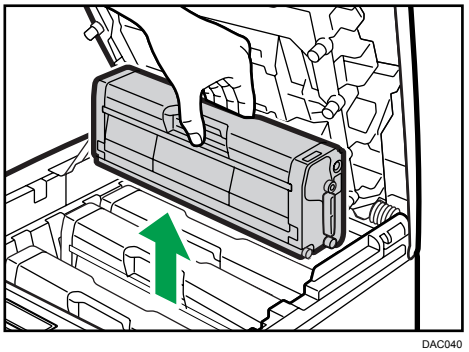

DAC040

- Do not shake the removed print cartridge. Doing so can cause remaining toner to leak.
- Place the old print cartridge on paper or similar material to avoid dirtying your workspace.
- The toner color is indicated by the label on each print cartridge.

3. **Take the new print cartridge out of the box, and then take it out of the plastic bag.**

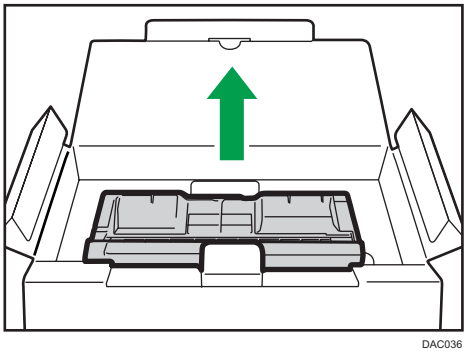

DAC036

4. **Hold the print cartridge and shake it from side to side five or six times.**

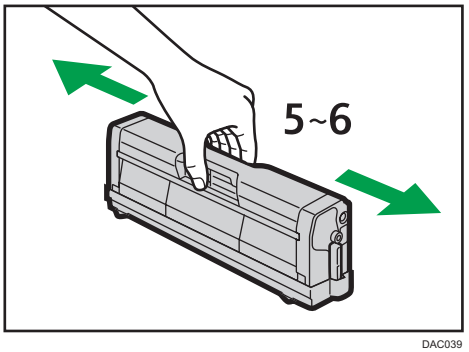

DAC039

Even distribution of toner within the bottle improves print quality.

5. **Remove the protective cover from the print cartridge.**

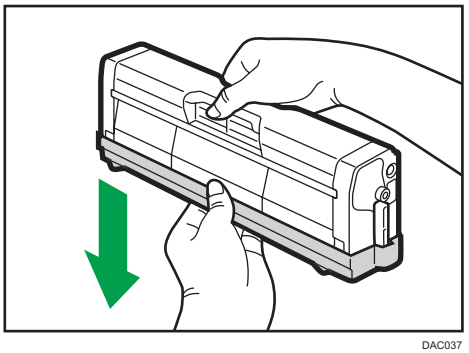

DAC037

6. **Check the toner color and corresponding location, and then carefully insert the print cartridge vertically.**

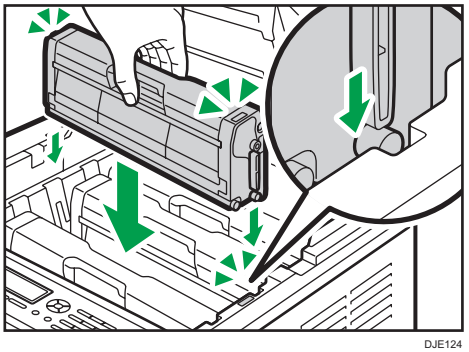

DJE124

7. **Using both hands, hold the center of the top cover and close the cover carefully. Be careful not to trap your fingers.**

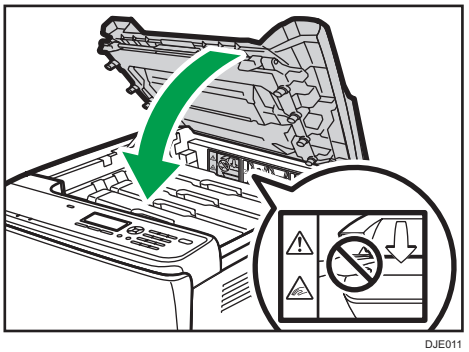

DJE011

8. **Attach the protective cover you removed in Step 5 on the old print cartridge. Then, put the old print cartridge into the bag, and then put it into the box.**

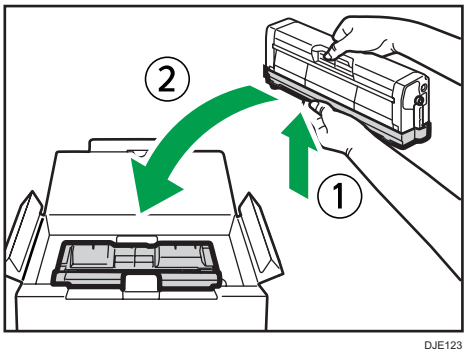

DJE123

Note

- Make sure to cover the old print cartridge with the protective cover for recycling and environmental purposes.
- Comply with the print cartridge recycling program, whereby used print cartridges are collected for processing. For details, ask your sales or service representative.

Replacing the Waste Toner Bottle

Messages on the screen

- Replace the waste toner bottle when the following message appears on the screen:

  "Replace: Waste Toner Bottle"

- Prepare a waste toner bottle when the following message appears on the screen:

  "Almost Full Waste Toner Bottle"

Important

- Waste toner bottles cannot be reused.
- For easy replacement, we recommend you purchase and store extra waste toner bottles.
- When removing the waste toner bottle, make sure not to tilt it.
- Make sure the transfer unit is installed. If the transfer unit is not installed, install it before turning on the power.
- Comply with the waste toner bottle recycling program, whereby used waste toner bottles are collected for processing. For details, ask your sales or service representative.
- Before removing the waste toner bottle from the machine, spread paper or similar material around the area to keep toner from dirtying your workspace.

1. Pull the front cover open lever and then carefully lower the front cover.

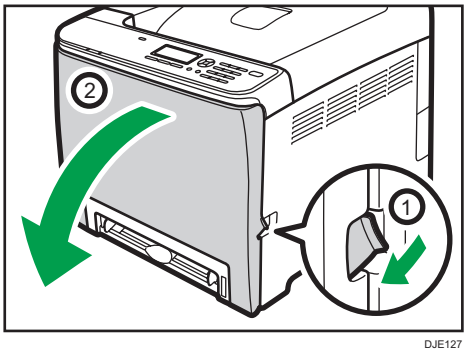

DJE127

2. Slide both levers on the front cover forward.

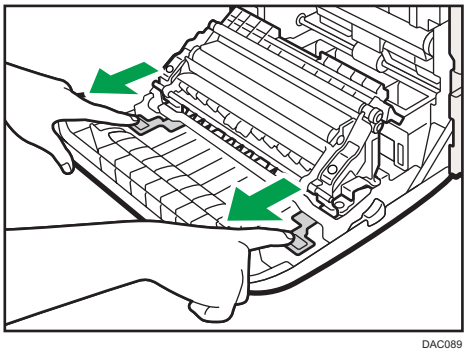

DAC089

3. Holding the tabs on both ends of the transfer unit, tilt it backwards and lift it up.

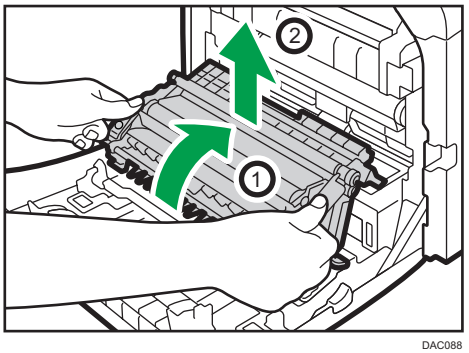

DAC088

4. Holding the handle at the center of the waste toner bottle, carefully pull it partially out without tilting it.

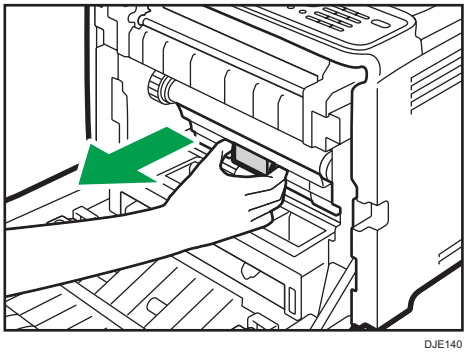

DJE140

5. **Pull the waste toner bottle halfway out, hold the bottle firmly, and then pull it straight out.**

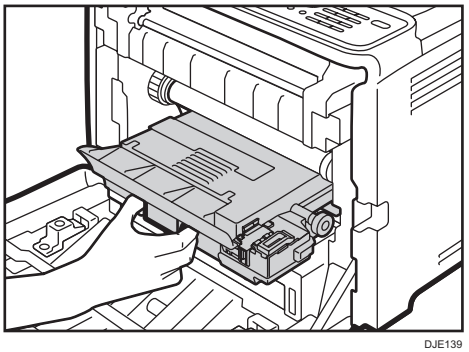

DJE139

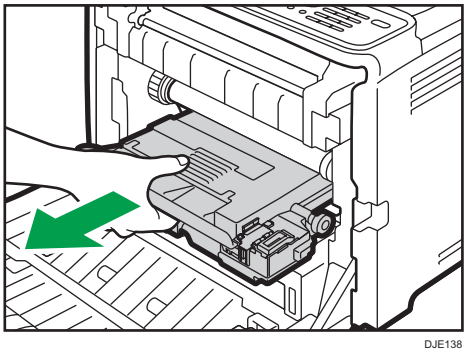

DJE138

To prevent the waste toner bottle from coming into contact with the intermediate transfer unit (the position shown by the arrow in the illustration below), do not lift the bottle while pulling it out.

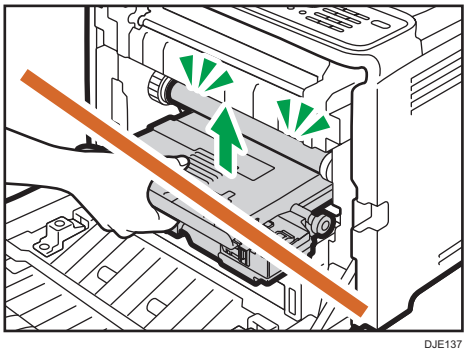

DJE137

6. **Close the bottle cap.**

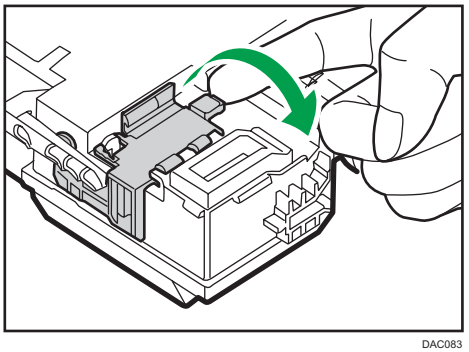

DAC083

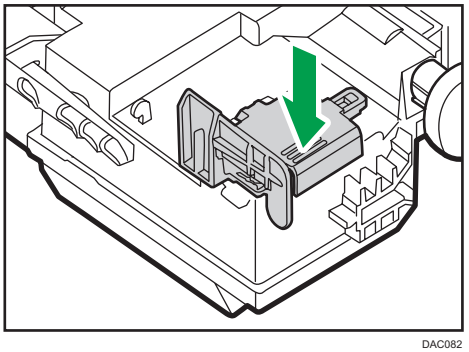

DAC082

7. **Take the new waste toner bottle out of the box, and then take it out of the plastic bag.**

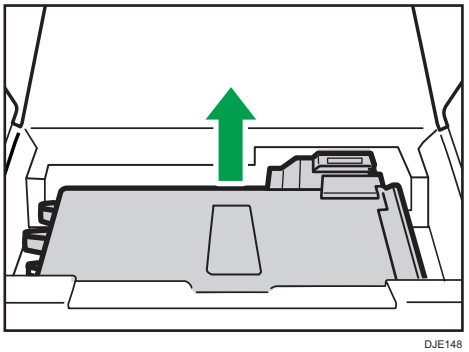

DJE148

8. **Holding the center of the new waste toner bottle, carefully insert it halfway into the machine body.**

   Leave the bottle cap open.

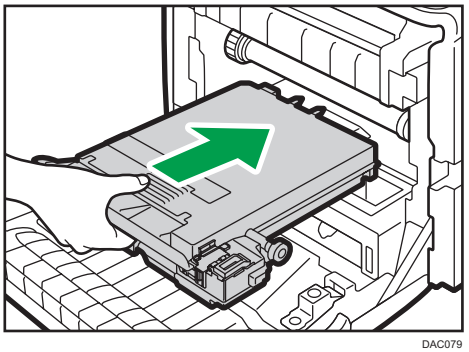

DAC079

To prevent the waste toner bottle from coming into contact with the intermediate transfer unit (the position shown by the arrow in the illustration below), do not lift the bottle while inserting it.

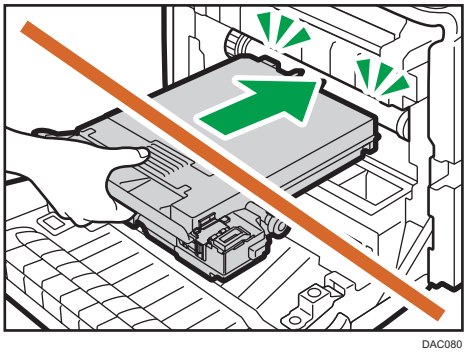

DAC080

9. Push in the waste toner bottle until it clicks.

Pressing the handle at the center, push the bottle all the way in.

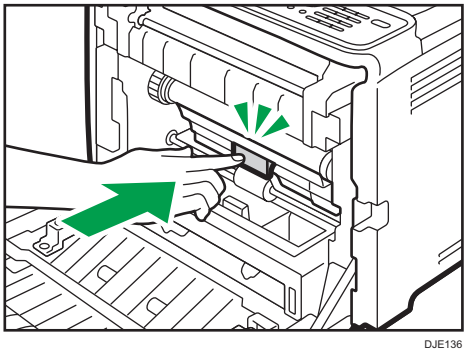

DJE136

10. **Place the transfer unit on the front cover. Slide the transfer unit along the guide rails into the machine.**

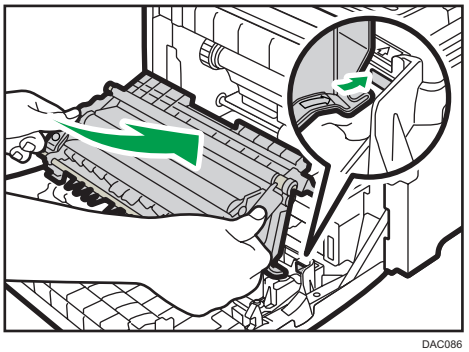

DAC086

11. **When it stops, push on the PUSH mark until it clicks.**

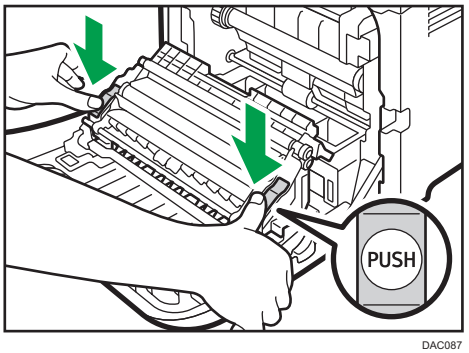

DAC087

12. **Using both hands, carefully push up the front cover until it closes.**

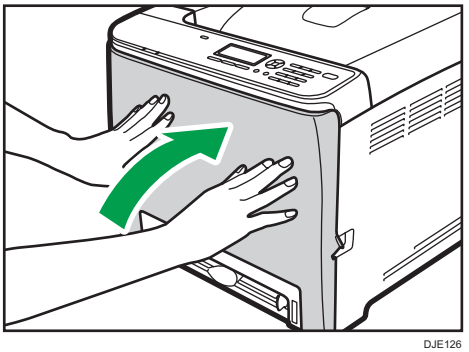

DJE126

Note

- When closing the front cover, push the upper area of the cover firmly.

Replacing a Component

Replacing the Intermediate Transfer Unit

If the Alert indicator on the control panel lights up and the "Replacement Required: Intermediate Transfer Unit" message appears on the display, contact your sales or service representative.

Replacing the Fusing Unit and Transfer Roller

If the Alert indicator on the control panel lights up and the "Replacement Required: Transfer Roller" or "Replacement Required: Fusing Unit" message appears on the display, contact your sales or service representative.

Cautions When Cleaning

Clean the machine periodically to maintain high print quality.

Dry wipe the exterior with a soft cloth. If it is not sufficient, wipe with a soft, damp cloth that has been wrung out thoroughly. If you still cannot remove the stain or grime, use a neutral detergent, wipe over the area with a thoroughly-wrung damp cloth, and then dry wipe the area and allow it to dry.

Important

- To avoid deformation, discoloration, or cracking, do not use volatile chemicals, such as benzine and thinner, or spray insecticide on the machine.
- If there is dust or grime inside the machine, wipe with a clean, dry cloth.
- Disconnect the plug from the wall outlet at least once a year. Clean away any dust and grime from the plug and outlet before reconnecting. Accumulated dust and grime may cause fire.
- Do not allow paper clips, staples, or other small objects to fall inside the machine.

Cleaning the Toner Density Sensor

Clean the toner density sensor when the following message appears on the control panel.

"Density Sensor Require Cleaning"

1. **Pull up the lever on the top cover, and then carefully raise the top cover.**

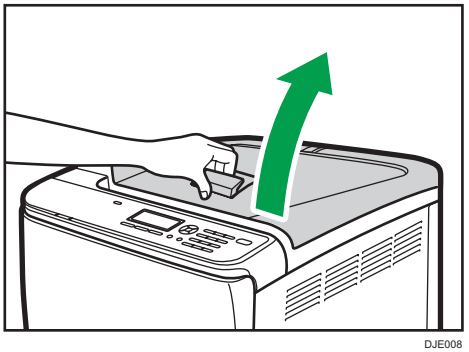

DJE008

2. **Remove the rearmost print cartridge.**

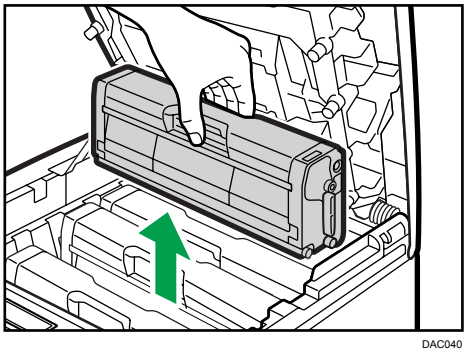

DAC040

3. **Slide the toner density sensor lever once to the left.**

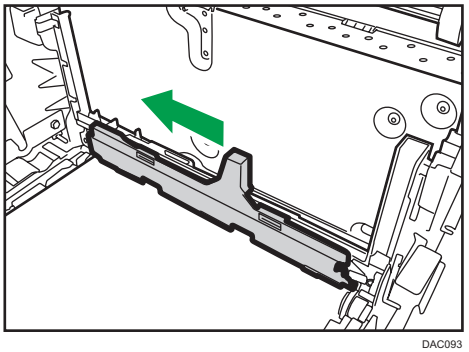

DAC093

4. **Carefully insert the print cartridge removed in Step 2 vertically.**

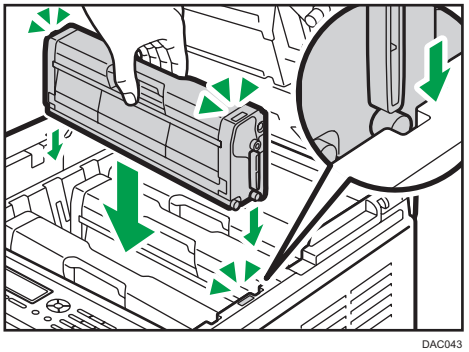

DAC043

5. **Using both hands, hold the center of the top cover and close the cover carefully. Be careful not to trap your fingers.**

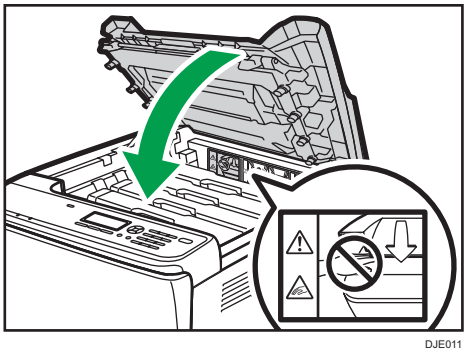

DJE011

Cleaning the Friction Pad and Paper Feed Roller

If the friction pad or paper feed roller is dirty, a multi-feed or misfeed might occur. In this case, clean the friction pad and paper feed roller as follows:

Important

- Do not use chemical cleaning fluids or organic solvents such as thinner or benzine.

1. **Turn off the power.**
2. **Unplug the power cord from the wall outlet. Remove all the cables from the machine.**
3. **Pull out Tray 1 carefully with both hands.**

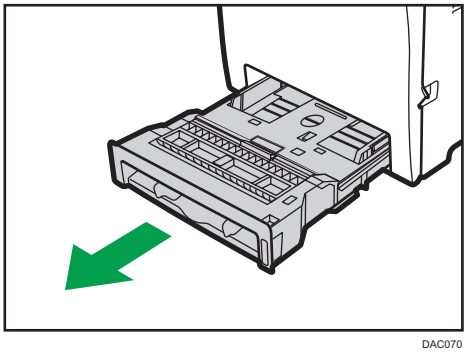

DAC070

Place the tray on a flat surface. If there is paper in the tray, remove it.

4. **Wipe the friction pad with a damp cloth.**

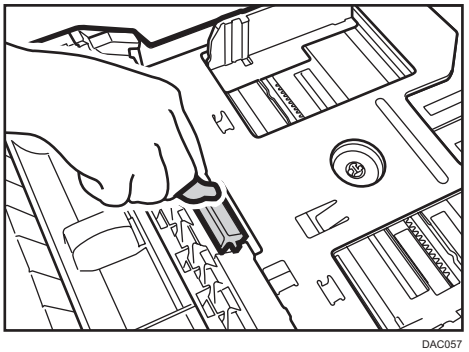

DAC057

5. Wipe the rubber part of the roller with a soft damp cloth. After that, wipe it with a dry cloth to remove the moisture.

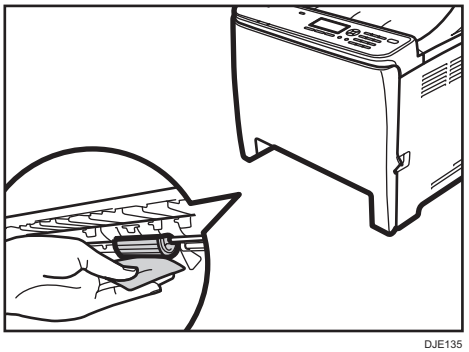

DJE135

6. Push the metal plate down until it clicks.

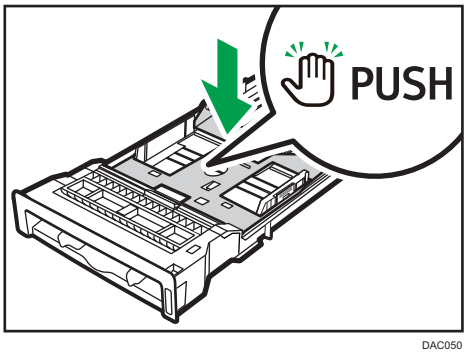

DAC050

7. Reload the removed paper into the tray, and then push the tray carefully into the machine until it clicks.

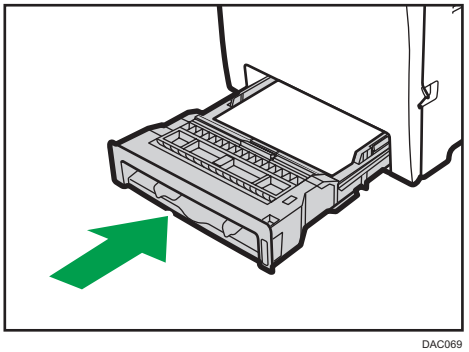

DAC069

8. Insert the plug of the power cord into the wall socket securely. Connect all the cables that were removed.
9. Turn on the power.

Note

- Paper jam or multi-sheet feed still occurs after cleaning the friction pad, contact your sales or service representative.
- If the optional Tray 2 is installed, clean its friction pad and paper feed roller in the same way as you did for Tray 1.

Cleaning the Registration Roller and Paper Tray

The registration roller and paper tray can become dirty with paper dust if you print to non-standard paper.

Clean the registration roller if white dots appear on prints.

Important

- Do not use chemical cleaning fluids or organic solvents such as thinner or benzine.
- Do not touch the transfer roller (as shown below).

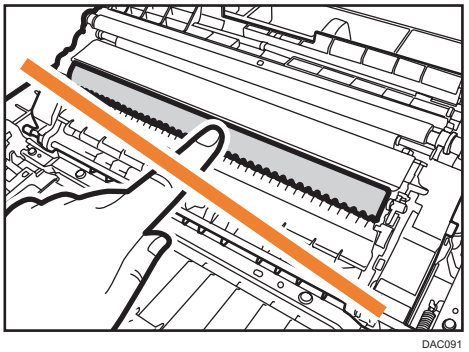

DAC091

1. Turn off the power.
2. Unplug the power cord from the wall outlet. Remove all the cables from the machine.
3. Pull out Tray 1 carefully with both hands.

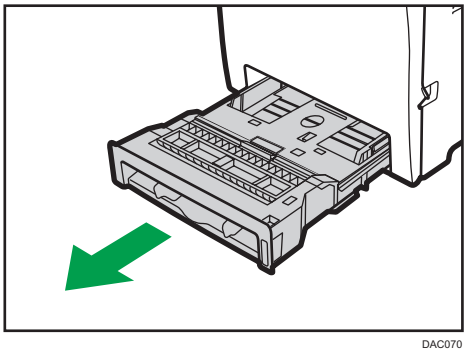

DAC070

Place the tray on a flat surface. If there is paper in the tray, remove it.

4. Wipe the inside of the paper tray with a cloth.

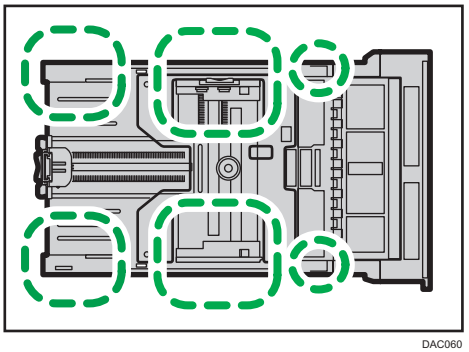

DAC060

5. Push the metal plate down until it clicks.

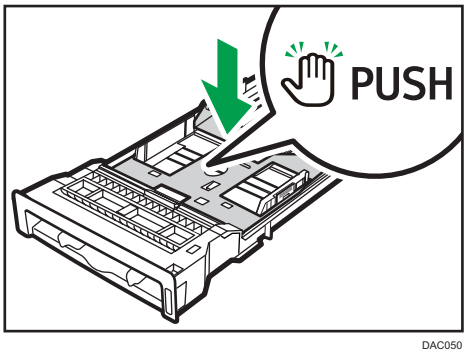

DAC050

6. Reload the removed paper into the tray, and then push the tray carefully into the machine until it clicks.

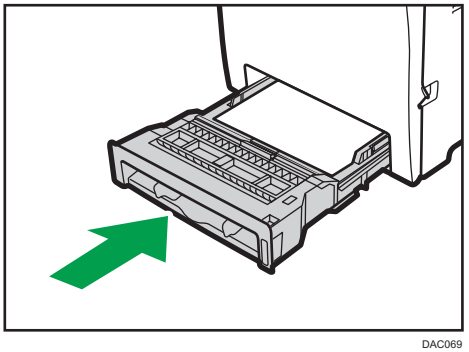

DAC069

7. **Pull the front cover open lever and then carefully lower the front cover.**

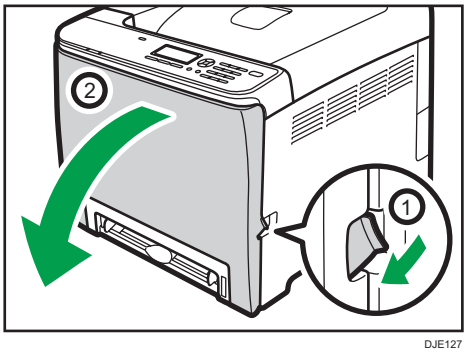

DJE127

Be sure to set the registration roller in the position shown by the arrow in the illustration below.

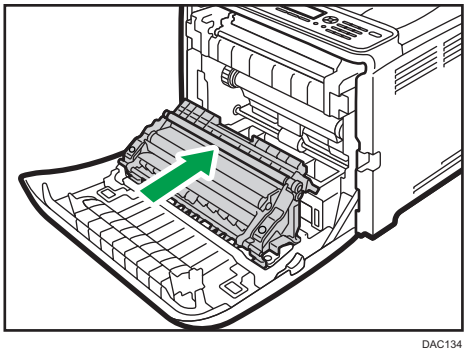

DAC134

Clean the registration roller if prints are smeared after a paper jam is cleared.

8. **Clean the registration roller by applying a soft damp cloth while turning it.**
9. **Using both hands, carefully push up the front cover until it closes.**

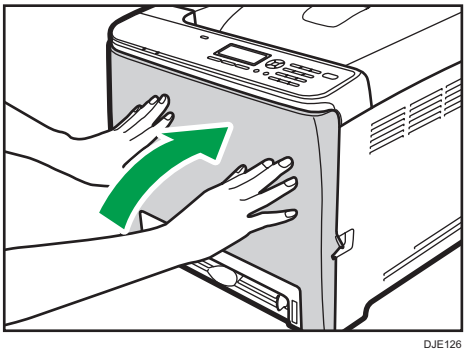

DJE126

10. **Plug in the power cord securely. Connect all the cables that were removed.**
11. **Turn on the power.**

Note

- When closing the front cover, push the upper area of the cover firmly.

7. Troubleshooting

Removing Paper Jams

If a paper jam occurs, one of the following messages appears on the control panel:

Important

- **If the alert indicator lights up continuously or flashes, switch to printer mode and check the displayed message.**

Message	Reference title
Internal Misfeed	See page 144 "If paper jams inside the fusing unit".
Misfeed: Stnd. Tray	
Misfeed: Paper Tray	See page 146 "If paper jams inside a tray".
Misfeed: Tray 1	
Misfeed: Tray 2	
Misfeed: Dup. Unit Remove Paper	See page 148 "If paper jams inside the transfer unit".

See the section identified by the message and remove the jammed paper accordingly.

Removing Printing Jams

CAUTION

- The inside of this machine becomes very hot. Do not touch the parts labeled "⚠" (indicating a hot surface).

- Some of this machine's internal components get very hot. For this reason, take care when removing misfed paper. Not doing so could result in burns.

Important

- **Jammed paper may be covered in toner. Be careful not to get toner on your hands or clothes.**
- **Toner on prints made immediately after clearing a paper jam may be insufficiently fused and may smudge. Make test prints until smudges no longer appear.**

- Do not forcefully remove jammed paper, as it may tear. Torn pieces remaining inside the machine will cause further jams and possibly damage the machine.
- Paper jam can cause pages to be lost. Check your print job for missing pages and reprint any pages that did not print out.

If paper jams inside the fusing unit

If paper jams inside the fusing unit, follow the procedure below to remove it.

Important

- Since the temperature around the guide is high, wait for it to cool down before checking for jammed paper.

1. **Pull the front cover open lever and then carefully lower the front cover.**

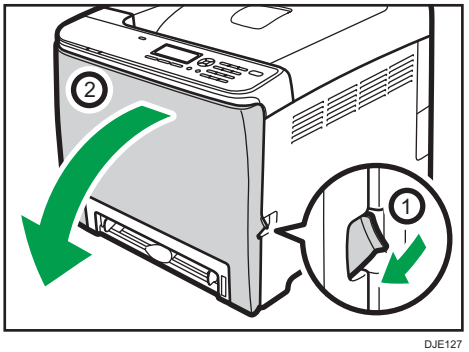

DJE127

2. **Lower the fusing unit lever, and pull out the jammed paper carefully.**

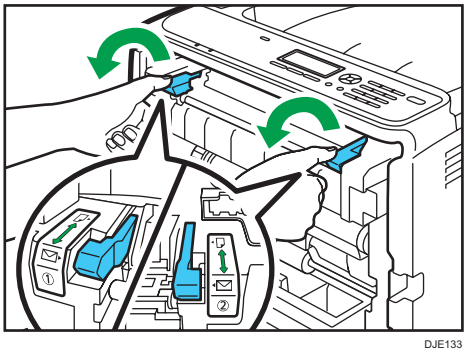

DJE133

Do not touch the fusing unit.

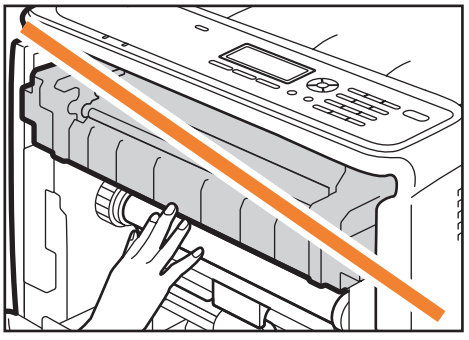

DJE132

Pull the paper downward to remove it. Do not pull it upward.

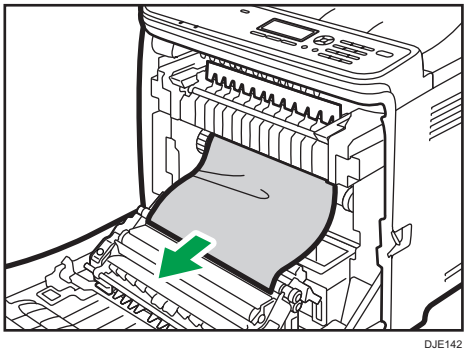

DJE142

If you cannot find the jammed paper, check for it by pulling down the guide.

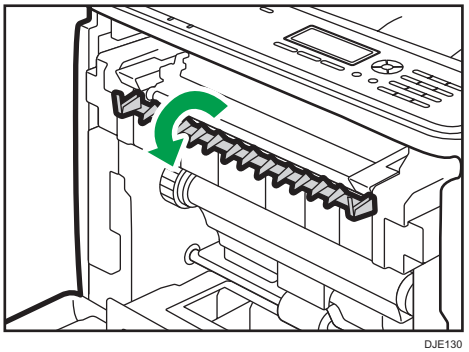

DJE130

3. **Pull up the fusing unit levers.**

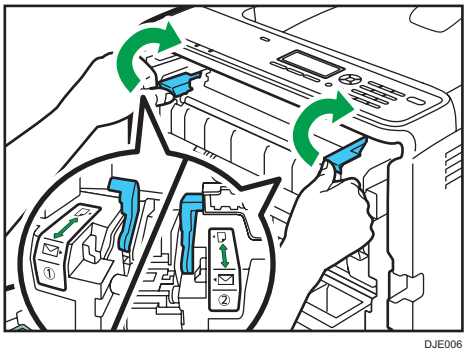

DJE006

4. **Using both hands, carefully push up the front cover until it closes.**

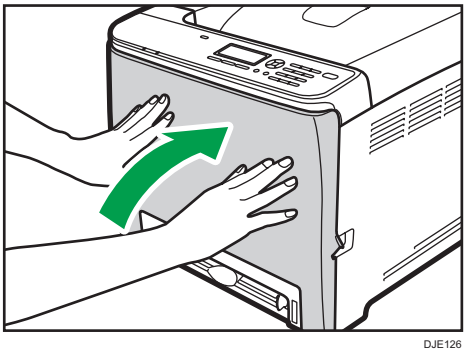

DJE126

Note

- When closing the front cover, push the upper area of the cover firmly. After closing the cover, check that the error is cleared.

If paper jams inside a tray

If paper jams in Tray 1 or 2, follow the procedure below to remove it.

1. **Pull the front cover open lever and then carefully lower the front cover.**

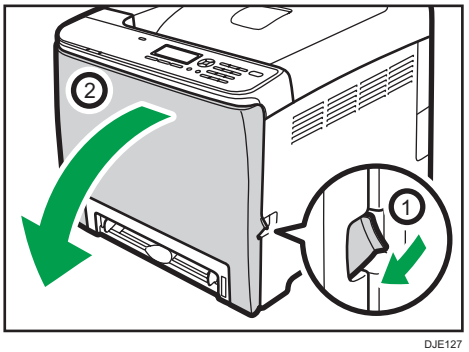

DJE127

2. Pull out the jammed paper carefully.

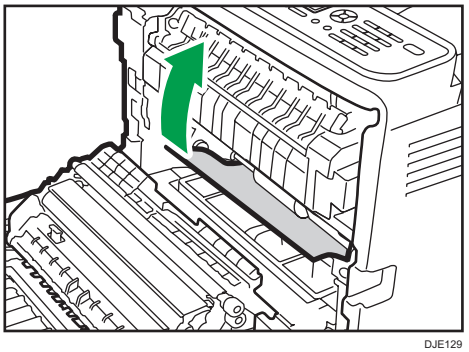

DJE129

Do not touch the fusing unit.

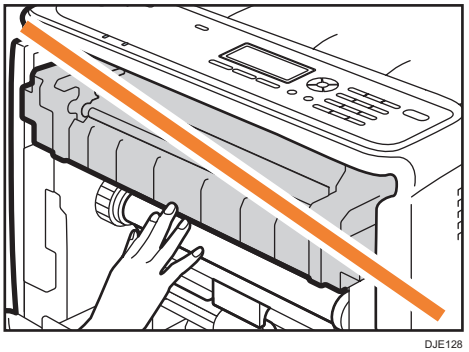

DJE128

If paper has jammed inside the transfer unit, holding both sides of the paper, pull the paper carefully forward and out.

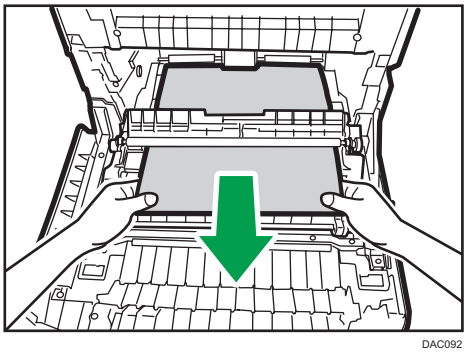

DAC092

3. **Using both hands, carefully push up the front cover until it closes.**

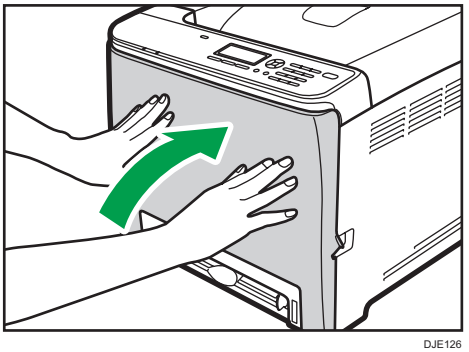

DJE126

Note

- Do not pull out the paper tray (Tray 1).
- If paper is jammed in Tray 2 but is difficult to locate, pull out Tray 2 to remove it. After removing the paper, carefully push Tray 2 all the way back inside the machine.
- When closing the front cover, push the upper area of the cover firmly. After closing the cover, check that the error is cleared.

If paper jams inside the transfer unit

If paper jams inside the transfer unit, follow the procedure below to remove it.

1. **Pull the front cover open lever and then carefully lower the front cover.**

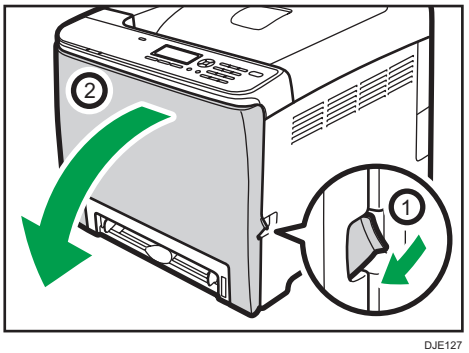

DJE127

2. **Carefully remove any paper that is jammed under the transfer unit.**

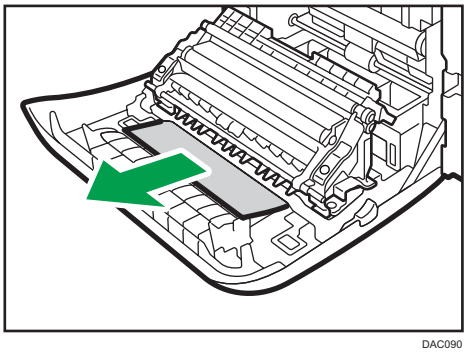

DAC090

If you cannot find the jammed paper, look inside the machine.

3. **Using both hands, carefully push up the front cover until it closes.**

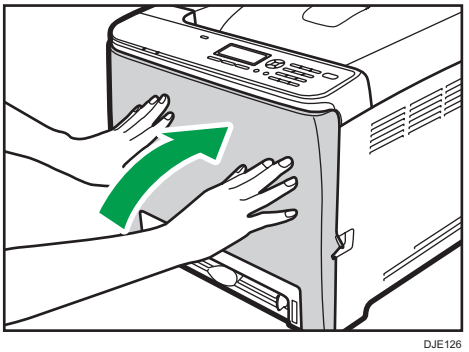

DJE126

Note

- When closing the front cover, push the upper area of the cover firmly. After closing the cover, check that the error is cleared.

Common Problems

This section explains how to troubleshoot common problems that may occur while operating the machine.

Problem	Possible cause	Solution
The machine does not turn on.	The power cord is not connected properly.	• Make sure that the power plug is firmly inserted into the wall outlet. • Make sure that the wall outlet is not defective by connecting another working device.
The alert indicator lights up continuously or flashes.	An error has occurred.	Switch to printer mode, check the displayed message, and troubleshoot the problem accordingly.
An error message appears on the machine's screen.	An error has occurred.	See page 167 "Error and Status Messages on the Screen".
Pages are not printed.	The machine is warming up or receiving data.	Wait until "Printing..." appears on the screen. If "Processing..." is displayed on the screen, the machine is receiving data.
Pages are not printed.	The interface cable is not connected correctly.	• Reconnect the cable. • Check that the interface cable is the correct type.
Strange noise is heard.	• The supplies or options are not properly installed. • The machine executes periodic cleaning of the interior when [Auto Cleaning] in [System Settings] is set to [On].	Check if the supplies or options are properly installed. The noise does not indicate a malfunction. Wait until the cleaning is complete.

Note

- If any of these problems persist, turn off the power, pull out the power cord, and contact your sales or service representative.

Paper Feed Problems

If the machine is operating but paper will not feed or paper jams frequently, check the condition of the machine and paper.

Problem	Solution
Paper does not feed smoothly.	• Use supported types of paper. See page 35 "Supported Paper". • Load paper correctly, making sure that the paper guides are properly adjusted. See page 48 "Loading Paper". • If the paper is curled, straighten the paper. • Take out the paper from the tray and fan it well. Then, reverse the top and bottom of the paper, and put it back in the tray.
Paper jams frequently.	• If there are gaps between the paper and paper guides, adjust the paper guides to remove the gaps. • Avoid printing on both sides of paper when printing images that contain large solid areas, which consume a large amount of toner. • Use supported types of paper. See page 35 "Supported Paper". • Load paper only as high as the upper limit markings on the paper guide. • Make sure that the friction pads, paper feed rollers or registration rollers are clean. See page 136 "Cleaning the Friction Pad and Paper Feed Roller".

Problem	Solution
Multiple sheets of paper are fed at once.	• Fan the paper well before loading. Also make sure that the edges are aligned by tapping the stack on a flat surface such as a desk. • Make sure that the paper guides are in the right position. • Use supported types of paper. See page 35 "Supported Paper". • Load paper only as high as the upper limit markings on the paper guide. • Make sure that the friction pads, paper feed rollers or registration rollers are clean. See page 136 "Cleaning the Friction Pad and Paper Feed Roller" and page 139 "Cleaning the Registration Roller and Paper Tray". • Check that paper was not added while there was still some left in the tray. Only add paper when there is none left in the tray.
The printed paper is wrinkled.	• The paper being used may be damp. Use paper that has been stored properly. See page 35 "Supported Paper". • Paper is too thin. See page 35 "Supported Paper". • If there are gaps between the paper and the paper guides, adjust the paper guides to remove the gaps. • Check that both the left and right fusing unit levers have been raised to the plain paper mark.
The printed paper is curled.	• Load the paper upside down in the paper tray. • If the paper curl is severe, retrieve prints from the output tray more frequently. • The paper being used may be damp. Use paper that has been stored properly. See page 35 "Supported Paper". • Select [Lvl.2: Medium] or [Lvl.3: Strong] in [Anti-Humidity Level] under [System Settings]. Note that if you select [Lvl. 2: Medium] or [Lvl.3: Strong], the first print takes longer than subsequent prints.

Problem	Solution
Images are not printed in the right position 	• Adjust the front end paper guide and both side paper guides to match the paper size. See page 48 "Loading Paper".
Images are printed diagonally to the pages. 	If there are gaps between the paper and the paper guides, adjust the paper guides to remove the gaps.

Print Quality Problems

Checking the Condition of the Machine

If there is a problem with the print quality, first check the condition of the machine.

Problem	Solution
There is a problem with the machine's location.	Make sure that the machine is on a level surface. Place the machine where it will not be subject to vibration or shock.
Unsupported types of paper is used.	Make sure that the paper being used is supported by the machine. See page 35 "Supported Paper".
The paper type setting is incorrect.	Make sure that the paper type setting of the printer driver matches the type of paper loaded. See page 35 "Supported Paper".
A non-genuine print cartridge is being used.	Refilled or non-genuine print cartridge reduces print quality and may cause malfunctions. Use genuine print cartridge only. See page 181 "Consumables".
An old print cartridge is being used.	Print cartridge should be opened before their expiration date and used within six months after being opened.
The machine is dirty.	See page 121 "Maintaining the Machine", and clean the machine as required.
Color degradation has occurred.	Color degradation may occur in color printing after the machine is moved or a large number of pages are printed. In this case, adjust color registration by executing [Color Registration] in [System Settings].

Checking the printer driver settings

Problem	Solution
The printed image is smudged.	**PCL 5c/6** On the printer driver's [Paper] tab, select [Bypass Tray] in the "Input Tray:" list. In the "Paper Type:" list, select a proper paper type. **PostScript 3** On the printer driver's [Paper/Quality] tab, select [Bypass Tray] in the "Paper Source" list. In the "Media" list, select a proper paper type.
Images smudge when rubbed. (Toner is not fixed.)	**PCL 5c/6** On the printer driver's [Paper] tab, select a proper paper type in the "Paper Type:" list. **PostScript 3** On the printer driver's [Paper/Quality] tab, select a proper paper type in the "Media" list.
The printed image is different from the image on the computer's display.	**Only when using PCL 5c/6** On the printer driver's [Print Quality] tab, select [Raster] in the "Graphics Mode" list.
When printing graphics, the output and the screen are different.	To print accurately, specify the printer driver setting to print without using the graphics command. For details about specifying the printer driver setting, see the printer driver Help.
Images are cut off, or excess is printed.	Use the same size paper selected in the application. If you cannot load paper of the correct size, use the reduction function to reduce the image, and then print. For details about the reduction function, see the printer driver Help.
Photo images are coarse.	Use the application's or printer driver's settings to specify a higher resolution. For details about the printer driver's settings, see the printer driver Help.
A solid line is printed as a dashed line or appears blurred.	Change the dithering settings on the printer driver. For details about the dithering settings, see the printer driver Help.

Problem	Solution
Fine lines are fuzzy, of inconsistent thickness, or do not appear.	Change the dithering settings on the printer driver. For details about the dithering settings, see the printer driver Help. If the problem persists, specify the settings of the application in which the image was created to change the thickness of the lines.

Printer Problems

This section describes printing problems and possible solutions.

When You Cannot Print Properly

Problem	Solution
An error occurs.	If an error occurs when printing, change the computer or printer driver settings. • Check the printer icon name does not exceed 32 alphanumeric characters. If it does, shorten it. • Check whether other applications are operating. Close any other applications, as they may be interfering with printing. If the problem is not resolved, close unneeded processes too. • Check that the latest printer driver is being used.
A print job is canceled.	• Printing on Legal size paper may be canceled, if the printing is performed with a certain print quality setting. If using the PCL printer driver, set [Gradation:] in [Print Quality] to [Speed] or [Standard]. If using the PostScript 3 printer driver, set [Print Quality] to [Standard] or [High Quality]. For details, see the printer driver Help. • If [I/O Timeout] under [System Settings] is set to 15 seconds, increase the time period. A print job may be canceled if printing is frequently interrupted by data from other ports, or if printing data is large and takes time for processing. For details, see page 75 "System Settings".

Problem	Solution
A Locked Print file is canceled.	• The machine already has 5 jobs or 5 MB of Locked Print data. Print or delete an existing Locked Print file. For details, see page 62 "Printing Confidential Documents". • Even if the machine cannot store any more Locked Print files, the machine holds the new Locked Print file for the period of time specified in [Locked Print] under [System Settings] before canceling that file. Within this time, you can print or delete the new Locked Print file. You can also print or delete an existing Locked Print file so that the new Locked Print file can be stored in the machine. For details about [Locked Print], see page 75 "System Settings". **Only when using PCL 5c/6** The Locked Print file has too many pages or it is too large. Reduce the number of pages to print, or print with a lower setting for [Gradation:] in [Print Quality]. For details, see the printer driver Help.
There is a considerable delay between the print start command and actual printing.	• Processing time depends on data volume. High volume data, such as graphics-heavy documents, take longer to be processed. • To speed up printing, reduce the printing resolution using the printer driver. For details, see the printer driver Help. • The machine is calibrating color. Wait for a while.
Documents are not printed properly when using a certain application, or image data is not printed properly. Some characters are printed faintly or not printed.	Change the print quality settings.

Problem	Solution
It takes too long to complete the print job.	• Photographs and other data intensive pages take a long time to be processed so simply wait when printing such data. • Changing the settings with printer driver may help to speed up printing. See the printer driver Help. • The data is so large or complex that it takes a long time to be processed. • If "Processing..." is displayed on the screen, the machine is receiving data. Wait for a while. • The printer is adjusting the color registration. Wait for a while.
A printed image is different from the image on the computer's display.	• When you use some functions, such as enlargement and reduction, the layout of the image might be different from that displayed in the computer display. • Check that the page layout settings are properly configured in the application. • Make sure the paper size selected in the printer properties dialog box matches the size of the paper loaded. For details, see the printer driver Help.
Images are cut off, or excess pages are printed.	If you are using paper whose size is smaller than the paper size selected in the application, use the same size paper selected in the application. If you cannot load paper of the correct size, use the reduction function to reduce the image, and then print. See the printer driver Help.

Problem	Solution
The color of the printout is different from the color on the computer's display.	• The colors made using color toner may be different from colors displayed on the display due to the difference of methods to reproduce colors. **Only when using PCL 5c/6** • Color gradation might appear differently if [On] is selected for [Economy Color] on the [Print Quality] tab in the printer driver's dialog box. See the printer driver Help. • Turn off the main power, and then turn it back on. If the color still appears different on the printout, perform the [Color Registration] under [System Settings]. For details, see page 75 "System Settings". If this procedure fails to resolve the problem, contact your sales or service representative.
Color changes extremely when adjusted with the printer driver.	**Only when using PCL 5c/6** Do not make extreme settings for the color balance under the [Print Quality] tab in the printer driver's dialog box. See the printer driver Help.
Color documents are printed in black and white.	• The printer driver is not set up for color printing. See the printer driver Help. • Some applications print color files in black and white.

When You Cannot Print Clearly

Problem	Solution
The whole printout is blurred.	• The paper being used may be damp. Use paper that has been stored properly. See page 35 "Supported Paper". • Select [Lvl.1: Weak], [Lvl.2: Medium] or [Lvl.3: Strong] in [Anti-Humidity Level] under [System Settings]. Note that if you select [Lvl.2: Medium] or [Lvl.3: Strong], the first print takes longer than subsequent prints. • If you select [On] for [Economy Color] in the [Print Quality] tab (PCL printer driver) or under [Printer Features] (PostScript 3 printer driver), print will be at lower density. For details, see the printer driver Help. • The print cartridge is almost empty. If "Replace Toner: X" ("X" indicates the toner color) appears on the screen, replace the indicated print cartridge. • Condensation may have occurred. If rapid change in temperature or humidity occurs, use this machine only after it has acclimatized.
The toner is powdery and comes away from the paper, or the printed image has a matt appearance.	Check if the fusing unit levers are properly set. Pull up the fusing unit levers.
Toner smears appear on the print side of the page.	• The paper setting may not be correct. For example, although you are using thick paper, the setting for thick paper may not be specified. Check the printer driver's paper settings. See the printer driver Help. • Check that the paper is not curled or bent. Envelopes can be curled easily. Flatten out the paper before loading it. See page 48 "Loading Paper".

Problem	Solution
White lines appear. 	The intermediate transfer belt is dirty. Follow the procedure below to clean the belt: 1. Open the top cover while the power is on. 2. Remove all print cartridges from the printer. 3. Close the top cover with both hands carefully. 4. When cleaning finishes, open the top cover and attach all the print cartridges again. If this procedure does not resolve the problem, contact your sales or service representative.
Horizontal lines appear on the printed paper.	• Impact can cause lines to appear on printed paper and other malfunctions. Protect the printer from impact at all times, especially while it is printing. • If lines appear on prints, turn the printer off, wait a few moments, and then turn it back on again. Then, perform the print job again.
The print color is different from the color specified.	If a specific color is missing, turn the power switch off and on. If this does not resolve the problem, contact your sales or service representative.
Photo images are coarse.	Some applications lower the resolution for making prints.
A color is missing or a printed image is partially blurred.	• The paper being used may be damp. Use paper that has been stored properly. See page 48 "Loading Paper". • Toner is almost empty. If the following message appears on the control panel, replace the print cartridge: "Replace Toner: X". ("X" indicates the toner color) See page 121 "Replacing the Print Cartridge". • Condensation may have occurred. If rapid change in temperature or humidity occurs, use this printer only after it has acclimatized.
Color shift occurs.	Perform the [Color Registration] under [System Settings]. For details, see page 75 "System Settings".

Problem	Solution
White spots appear.	The surrounding registration roller or paper tray can become dirty with paper dust if you use paper other than standard paper. Wipe any paper dust off both the paper tray and registration roller. See page 139 "Cleaning the Registration Roller and Paper Tray".
Colorless dots appear on solid color printouts.	Change the paper type currently selected in the Paper Type settings, and then print. Eg. [Recycled Paper] to [Thin Paper] to [Plain Paper]. See page 55 "Specifying Paper Type and Paper Size Using Control Panel".
White streaks or color streaks appear.	Toner is almost empty. If an error message appears on the control panel, replace the print cartridge of the color indicated. See page 121 "Replacing the Print Cartridge".
The backs of printed sheets are blemished.	• When removing a jammed sheet, the inside of the printer may have become dirty. Print several sheets until they come out clean. • If document size is larger than paper size, e.g. A4 document on B5 paper, the back of the next printed sheet may become dirty.
Black gradation is not natural.	**Only when using PostScript 3** Select [CMY + K] for [Gray Reproduction] in the printer driver's dialog box. See the printer driver Help.
Solid lines are printed as broken lines.	**Only when using PostScript 3** Change the [Dithering] setting in the printer driver's dialog box. See the printer driver Help.

Problem	Solution
Fine dot patterns do not print.	**Only when using PostScript 3** Change the [Dithering] setting in the printer driver's dialog box. See the printer driver Help.
Solid areas, lines or text are shiny or glossy when created as a mixture of cyan, magenta, yellow.	**Only when using PostScript 3** Select [Black by K] for [Gray Reproduction] in the printer driver's dialog box. See the printer driver Help.
Speckling occurs in areas of solid black print.	**Only when using PostScript 3** Select [CMY + K] for [Gray Reproduction] in the printer driver's dialog box. See the printer driver Help.
If rubbed with your finger, the print smears.	The setting of the paper may not be correct. For example, although thick paper is used, the setting for thick paper may not be specified. • Check the paper settings of this printer. See page 48 "Loading Paper". • Check the paper settings of the printer driver. See the printer driver Help.

When Paper Is Not Fed Properly

Problem	Solution
Prints fall behind the machine when they are delivered.	Pull up the appropriate stop fence (forward fence for A4/Letter, rear fence for Legal size prints). See page 9 "Guide to Components".

Problem	Solution
Prints do not stack properly.	• The paper being used may be damp. Use paper that has been stored properly. See page 35 "Supported Paper". • Select [Lvl.2: Medium] or [Lvl.3: Strong] in [Anti-Humidity Level] under [System Settings]. Note that if you select [Lvl. 2: Medium] or [Lvl.3: Strong], the first print takes longer than subsequent prints. • Pull up the appropriate stop fence (forward fence for A4/Letter, rear fence for Legal size prints). See page 9 "Guide to Components".
The printed paper is curled.	• Load the paper upside down in the paper tray. • If the paper curl is severe, retrieve prints from the output tray more frequently. • The paper being used may be damp. Use paper that has been stored properly. • Select [Lvl.1: Weak], [Lvl.2: Medium] or [Lvl.3: Strong] in [Anti-Humidity Level] under [System Settings]. Note that if you select [Lvl.2: Medium] or [Lvl.3: Strong], the first print takes longer than subsequent prints.
Printed envelopes come out creased.	Check if the fusing unit levers are properly set. Lower the fusing unit levers.

Other Printing Problems

Problem	Solution
The toner has run out and printing has stopped.	When the "Continue printing?" message appears on the control panel, pressing [Yes] allows you to print a few more pages, but the print quality of those pages may be lower.

Error and Status Messages on the Screen

Messages are listed in alphabetical order in the table below.

"X" indicates the parts of the messages that appear differently depending on the situation, such as the paper size, paper type, and tray name.

Important

- **If the alert indicator lights up continuously or flashes, switch to printer mode and check the displayed message.**

Message	Causes	Solutions
Open Frt. Cvr. then move Env Lvr up/dwn	The fusing unit levers are not positioned correctly.	The machine can start printing only if the fusing unit levers are in the correct positions for the paper type. • To print on an envelope, open the front cover, and then lower the left and right levers to the envelope mark. • To print on paper, open the front cover, and then raise the left and right levers to the plain paper mark.
Check Paper Size	The paper size set for the document differs from the size of the paper in the indicated tray.	Press [FormFeed] to begin printing, or press [JobReset] to cancel the job.
Check Paper Type	The paper type set for the document differs from the type of the paper in the indicated tray.	Press [FormFeed] to begin printing, or press [JobReset] to cancel the job.
Cover open	A cover is open.	Close the cover completely.
Density Sensor Require Cleaning	The machine failed to adjust color registration.	Clean the toner density sensor. See page 134 "Cleaning the Toner Density Sensor".
Indep.Sply.Toner: X	A non-supported print cartridge is installed for the indicated color.	Remove and replace it with a print cartridge specified by an authorized dealer.
Internal Misfeed	Paper has been jammed in the machine.	Remove the jammed paper. See page 152 "Paper Feed Problems".

Message	Causes	Solutions
Memory Overflow	• The data is too large or complex to print. • If you try to print a Locked Print file stored in the machine with the printer driver's [Gradation:] set to [Fine] in the [Print Quality] tab, printing may be canceled depending on the machine's current memory usage. • When performing printing on Legal size paper under certain print quality setting, print data becomes too large and the job may be canceled.	• Select [600 x 600 1bit] in [Resolution] under [Printer Features] to reduce the size of data. See page 83 "Printer Features Settings". • Print or delete other Locked Print files in the machine, and then print the Locked Print file that the machine failed to print. Alternately, resend the Locked Print file to the machine with [Gradation:] set to [Speed] or [Standard], and then print the Locked Print file. • If using the PCL printer driver, set [Gradation:] in [Print Quality] to [Speed] or [Standard]. If using the PostScript 3 printer driver, set [Print Quality] in [Printer Features] to [Standard] or [High Quality].
Misfeed: Dup. Unit Remove Paper	Paper has been jammed in the duplex unit.	Remove the jammed paper. See page 152 "Paper Feed Problems".
Misfeed: Paper Tray	Paper has been jammed in the paper tray.	Remove the jammed paper. See page 152 "Paper Feed Problems".
Misfeed: Stnd. Tray	Paper has been jammed in the paper exit area.	Remove the jammed paper. See page 152 "Paper Feed Problems".
Misfeed: Tray 1	Paper has been jammed in the Tray 1 paper input area.	Remove the jammed paper. See page 152 "Paper Feed Problems".
Misfeed: Tray 2	Paper has been jammed in the Tray 2 paper input area.	Remove the jammed paper. See page 152 "Paper Feed Problems".
Out of Paper: X	The indicated tray has run out of paper.	Load paper to the indicated tray. See page 48 "Loading Paper".
Please Restart Machine	The machine needs to be restarted.	Turn off the power, and then turn it back on.

Message	Causes	Solutions
Remove Paper: Bypass Tray	The machine failed to proceed with the print job, because Tray 1 or Tray 2 was specified as the input tray but paper was loaded in the bypass tray.	Remove paper from the bypass tray.
Replace IntTrans. Belt	The transfer belt is no longer usable, and must be replaced.	Contact your sales or service representative.
Replace Required Soon: Toner Cartridge (X)	The print cartridge is almost empty.	Prepare a new print cartridge.
Replace Required Soon: Waste Toner Bottle	The waste toner bottle needs to be replaced soon.	Prepare a new waste toner bottle.
Setting Error: Waste Toner Bottle	The waste toner bottle has been installed incorrectly.	Reinstall the waste toner bottle. See page 126 "Replacing the Waste Toner Bottle".

8. Appendix

Functions and Network Settings Available in an IPv6 Environment

The functions and network settings of this machine that are available in an IPv6 environment differ from those available in an IPv4 environment. Make sure the functions you use are supported in an IPv6 environment, and then configure the necessary network settings.

For details about specifying the IPv6 settings, see page 87 "Network Settings".

Available Functions

FTP Printing

Prints documents via FTP using the EPRT and EPSV commands. An FTP client that complies with RFC 2428 (an IPv6-capable operating system and IPv6-capable FTP application) is required to use these commands.

Printer

Prints documents using the printer driver.

Web Image Monitor

Allows you to check the machine's status and configure its settings using a Web browser.

Configuration Page

Prints a configuration page that shows you the machine's configuration, IP address, and other details.

Transmission Using IPsec

For securer communications, this machine supports the IPsec protocol. When applied, IPsec encrypts data packets at the network layer using shared key encryption. The machine uses encryption key exchange to create a shared key for both sender and receiver. To achieve even higher security, you can also renew the shared key on a validity period basis.

Important

- **IPsec is not applied to data obtained through DHCP, DNS, or WINS.**
- **IPsec compatible operating systems are Windows Vista/7, Windows Server 2003/2003 R2/2008/2008 R2, Mac OS X 10.6 and later, Red Hat Enterprise Linux WS 4.0, and Solaris 10. However, some setting items are not supported depending on the operating system. Make sure the IPsec settings you specify are consistent with the operating system's IPsec settings.**
- **If you cannot access Web Image Monitor due to IPsec configuration problems, disable IPsec under [Admin. Tools] on the control panel, and then access Web Image Monitor.**

Note

- For details about specifying the IPsec settings using Web Image Monitor, see page 93 "Configuring the Machine Using Web Image Monitor".
- For details about disabling IPsec using the control panel, see page 91 "Administrator Settings".

Encryption and Authentication by IPsec

IPsec consists of two main functions: the encryption function, which ensures the confidentiality of data, and the authentication function, which verifies the sender of the data and the data's integrity. This machine's IPsec function supports two security protocols: the ESP protocol, which enables both of the IPsec functions at the same time, and the AH protocol, which enables only the authentication function.

ESP Protocol

The ESP protocol provides secure transmission through both encryption and authentication. This protocol does not provide header authentication.

- For successful encryption, both the sender and receiver must specify the same encryption algorithm and encryption key. The encryption algorithm and encryption key are specified automatically.
- For successful authentication, the sender and receiver must specify the same authentication algorithm and authentication key. The authentication algorithm and authentication key are specified automatically.

AH Protocol

The AH protocol provides secure transmission through authentication of packets only, including headers.

- For successful authentication, the sender and receiver must specify the same authentication algorithm and authentication key. The authentication algorithm and authentication key are specified automatically.

AH Protocol + ESP Protocol

When combined, the ESP and AH protocols provide secure transmission through both encryption and authentication. These protocols provide header authentication.

- For successful encryption, both the sender and receiver must specify the same encryption algorithm and encryption key. The encryption algorithm and encryption key are specified automatically.
- For successful authentication, the sender and receiver must specify the same authentication algorithm and authentication key. The authentication algorithm and authentication key are specified automatically.

Note

- Some operating systems use the term "Compliance" in place of "Authentication".

Security Association

This machine uses encryption key exchange as the key setting method. With this method, agreements such as the IPsec algorithm and key must be specified for both sender and receiver. Such agreements form what is known as an SA (Security Association). IPsec communication is possible only if the receiver's and sender's SA settings are identical.

The SA settings are auto configured on both parties' machines. However, before the IPsec SA can be established, the ISAKMP SA (Phase 1) settings must be auto configured. When this is done, the IPsec SA (Phase 2) settings, which allow actual IPsec transmission, will be auto configured.

Also, for further security, the SA can be periodically auto updated by applying a validity period (time limit) for its settings. This machine only supports IKEv1 for encryption key exchange.

Multiple settings can be configured in the SA.

Settings 1-10

You can configure ten separate sets of SA details (such as different shared keys and IPsec algorithms).

IPsec policies are searched through one by one, starting at [No.1].

Encryption Key Exchange Settings Configuration Flow

This section explains the procedure for specifying encryption key exchange settings.

Machine	PC
1. Set the IPsec settings on Web Image Monitor.	1. Set the same IPsec settings as the machine on PC.
2. Enable IPsec settings.	2. Enable IPsec settings.
3. Confirm IPsec transmission.	

Note

- After configuring IPsec, you can use "ping" command to check if the connection is established correctly. Because the response is slow during initial key exchange, it may take some time to confirm that transmission has been established.
- If you cannot access Web Image Monitor due to IPsec configuration problems, disable IPsec on the control panel, and then access Web Image Monitor.
- For details about disabling IPsec using the control panel, see page 91 "Administrator Settings".

Specifying Encryption Key Exchange Settings

Important

- **[IPsec Settings] appears only if the administrator password has been configured.**

Specify it using Web Image Monitor.

1. **Start the Web browser, and access the machine by entering its IP address.**
2. **Click [IPsec Settings].**
3. **Click the [IPsec Policy List] tab.**
4. **Select the number of the setting you want to modify in the list, and then click [Change].**
5. **Modify the IPsec related settings as necessary.**
6. **Enter the administrator password, and then click [Apply].**
7. **Click the [IPsec Global Settings] tab, and then select [Active] in [IPsec Function].**
8. **If necessary, specify [Default Policy], [Broadcast and Multicast Bypass], and [All ICMP Bypass] also.**
9. **Enter the administrator password, and then click [Apply].**

Specifying IPsec Settings on the Computer

Specify exactly the same settings for IPsec SA settings on your computer as are specified for the IPsec Settings on the machine. Setting methods differ according to the computer's operating system. The following procedure is based on Windows 7 in an IPv4 environment as an example.

1. **On the [Start] menu, click [Control Panel], [System and Security], and then click [Administrative Tools].**
2. **Double-click [Local Security Policy], and then click [IP Security Policies on Local Computer].**
3. **In the "Action" menu, click [Create IP Security Policy...].**

   The IP Security Policy Wizard appears.
4. **Click [Next].**
5. **Enter a security policy name in "Name", and then click [Next].**
6. **Clear the "Activate the default response rule (earlier versions of Windows only)." check box, and then click [Next].**
7. **Select "Edit properties", and then click [Finish].**
8. **In the "General" tab, click [Settings...].**
9. **In "Authenticate and generate a new key after every", enter the same validity period (in minutes) that is specified on the machine in [IKE Life Time], and then click [Methods...].**
10. **Confirm that the Encryption Algorithm ("Encryption"), Hash Algorithm ("Integrity"), and IKE Diffie-Hellman Group ("Diffie-Hellman Group") settings in "Security method preference order" all match those specified on the machine in [IKE Settings].**

    If the settings are not displayed, click [Add...].
11. **Click [OK] twice.**
12. **Click [Add...] in the "Rules" tab.**

    The Security Rule Wizard appears.
13. **Click [Next].**
14. **Select "This rule does not specify a tunnel", and then click [Next].**
15. **Select the type of network for IPsec, and then click [Next].**
16. **Click [Add...] in the IP Filter List.**
17. **In [Name], enter an IP Filter name, and then click [Add...].**

    The IP Filter Wizard appears.
18. **Click [Next].**

19. **In [Description:], enter a name or a detailed explanation of the IP filter, and then click [Next].**

    You may click [Next] and proceed to the next step without entering any information in this field.

20. **Select "My IP Address" in "Source address", and then click [Next].**
21. **Select "A specific IP Address or Subnet" in "Destination address", enter the machine's IP address, and then click [Next].**
22. **For the IPsec protocol type, select "Any", and then click [Next].**
23. **Click [Finish], and then click [OK].**
24. **Select the IP filter that you have just created, and then click [Next].**
25. **Click [Add...] in the Filter Action.**

    The Filter Action Wizard appears.

26. **Click [Next].**
27. **In [Name], enter a Filter Action name, and then click [Next].**
28. **Select "Negotiate security", and then click [Next].**
29. **Select one of options for computers allowed to communicate with, and then click [Next].**
30. **Select "Custom" and click [Settings...].**
31. **When [ESP] is selected for the machine in [Security Protocol] under [IPsec Settings], select [Data integrity and encryption (ESP)], and configure the following settings:**

    Set the value of [Integrity algorithm] to the same value as the [Authentication Algorithm for ESP] specified on the machine.

    Set the value of [Encryption algorithm] to the same value as the [Encryption Algorithm for ESP] specified on the machine.

32. **When [AH] is selected for the machine in [Security Protocol] under [IPsec Settings], select [Data and address integrity without encryption (AH)], and configure the following settings:**

    Set the value of [Integrity algorithm] to the same value as the [Authentication Algorithm for AH] specified on the machine.

    Clear the [Data integrity and encryption (ESP)] check box.

33. **When [ESP&AH] is selected for the machine in [Security Protocol] under [IPsec Settings], select [Data and address integrity without encryption (AH)], and configure the following settings:**

    Set the value of [Integrity algorithm] under [Data and address integrity without encryption (AH)] to the same value as [Authentication Algorithm for AH] specified on the machine.

    Set the value of [Encryption algorithm] under [Data integrity and encryption (ESP)] to the same value as [Encryption Algorithm for ESP] specified on the machine.

34. **In the Session key settings, select "Generate a new key every", and enter the same validity period (in [Seconds] or [Kbytes]) as that specified for [Life Time] on the machine.**
35. **Click [OK], and then click [Next].**
36. **Click [Finish].**

    If you are using IPv6 under Windows Vista or a newer version of Windows, you must repeat this procedure from Step 12 and specify ICMPv6 as an exception. When you reach Step 22, select [58] as the protocol number for the "Other" target protocol type, and then set [Negotiate security] to [Permit].
37. **Select the filter action that you have just created, and then click [Next].**
38. **Select one of options for an authentication method, and then click [Next].**
39. **Click [Finish], and then click [OK] twice.**

    The new IP security policy (IPsec settings) is specified.
40. **Select the security policy that you have just created, right click on it, and then click [Assign].**

    IPsec settings on the computer are enabled.

Note

- To disable the computer's IPsec settings, select the security policy, right click, and then click [Un-assign].

Enabling and Disabling IPsec Using the Control Panel

1. **Press the [菜单] key.**
2. **Press the [▲] or [▼] key to select [Admin. Tools], and then press the [OK] key.**
3. **If you are requested to enter a password, enter the password using the number keys, and then press the [OK] key.**
4. **Press the [▲] or [▼] key to select [IPsec], and then press the [OK] key.**
5. **Press the [▲] or [▼] key to select [Active] or [Inactive], and then press the [OK] key.**
6. **Press the [菜单] key to return to the initial screen.**

Note

- A password for accessing the [Admin. Tools] menu can be specified in [Admin. Tools Lock]. For details about [Admin. Tools Lock], see page 91 "Administrator Settings".

Notes About the Toner

- Proper operation cannot be guaranteed if any third-party toner is used.
- Depending on printing conditions, there are cases where the printer cannot print the number of sheets indicated in the specifications.
- Replace the print cartridge if the printed image suddenly becomes pale or blurred.
- When operating the machine for the first time, use the print cartridge supplied with this machine. If this cartridge is not initially used, the following problems may occur:
  - "Replace Required Soon:" "Toner Cartridge (X)" will be displayed before the toner runs out.
  - "Replace Toner: X" will be displayed when the toner runs out, but instead the printed image suddenly becomes pale or blurred.
- The lifetime of the photo conductor, which is built into the print cartridge, is taken into account in displaying "Replace Required Soon:" "Toner Cartridge (X)". If the photo conductor stops working before the toner runs out, "Replace Required Soon:" "Toner Cartridge (X)" may be displayed.

Moving and Transporting the Machine

This section provides cautions that you must follow when moving the machine both short and long distances.

Repack the machine in its original packing materials when moving it over a long distance.

Important

- **Be sure to disconnect all cables from the machine before transporting it.**
- **The machine is a precision piece of machinery. Be sure to handle it carefully when moving it.**
- **Make sure to move the machine horizontally. Take extra caution when carrying the machine up or down stairs.**
- **If Tray 2 is installed, remove it from the machine, and move them separately.**
- **Do not remove the print cartridge when moving the machine.**
- **Be sure to hold the machine level while carrying it. To prevent toner from spilling, move the machine carefully.**

1. **Be sure to check the following points:**
   - The power switch is turned off.
   - The power cord is unplugged from the wall outlet.
   - All other cables are unplugged from the machine.
2. **If Tray 2 is installed, remove it.**
3. **Lift the machine using the inset grips on both sides of the machine, and then move it horizontally to the place where you want to use it.**
4. **If you have removed Tray 2, reinstall it.**

Note

- To move the machine over a long distance, pack it well and empty all the paper trays. Take care not to tip or tilt the machine during transit.
- Toner might spill inside the machine if the machine is not kept level during transit.
- For more information about moving the machine, contact your sales or service representative.

Disposal

Ask your sales or service representative for information about correct disposal of this machine.

Where to Inquire

Contact your sales or service representative for further information about the topics included in this manual or to inquire about other topics not included in this manual.

Consumables

CAUTION

- Our products are engineered to meet high standards of quality and functionality, and we recommend that you use only the expendable supplies available at an authorized dealer.

Print Cartridge

Print cartridge	Average printable number of pages per cartridge *1
Black	4,500 pages
Cyan	4,000 pages
Magenta	4,000 pages
Yellow	4,000 pages

*1 The printable number of pages is based on pages that are compliant with ISO/IEC 19798 and the image density set as the factory default. ISO/IEC 19798 is an international standard on measurement of printable pages, set by the International Organization for Standardization.

Note

- Use print cartridges supported by the relevant model. Otherwise, the machine will not operate.
- If print cartridges are not changed when necessary, printing will become impossible. For easy replacement, we recommend you purchase and store extra print cartridges.
- The actual number of printable pages varies depending on the image volume and density, number of pages printed at a time, paper type and paper size used, and environmental conditions such as temperature and humidity.
- Print cartridges may need to be changed sooner than indicated above due to deterioration over the period of use.
- Print cartridges (consumables) are not covered by warranty. However, if there is a problem, contact the store where they were purchased.
- When you first use this machine, use the four print cartridges packaged with the machine.
- The supplied print cartridges are good for approximately 1,000 pages.
- This machine routinely performs cleaning and uses toner during this operation to maintain quality.
- To prevent a cleaning malfunction, you may need to replace a print cartridge even if it is not empty.

Waste Toner Bottle

Name	Average printable number of pages*1
WTC-205	25,000 pages

*1 A4/Letter 5% test chart, 3 pages per job, printing in 50% black and white/color.

Note

- The actual number of printable pages varies depending on the image volume and density, number of pages printed at a time, paper type and paper size used, and environmental conditions such as temperature and humidity.
- If the waste toner bottle is not changed when necessary, printing will become impossible. For easy replacement, we recommend you purchase and store extra waste toner bottles.

Specifications of the Machine

This section lists the machine's specifications.

General Function Specifications

Configuration

Desktop

Print process

Laser electrostatic transfer

Maximum paper size for printing

Legal ($8^1/_2$ × 14 inches)

Warm-up time

30 seconds or less (23 °C, 71.6 °F)

Paper sizes

- Standard paper sizes

  A4, B5 JIS, A5, A6, Legal ($8^1/_2$ × 14 inches), Letter ($8^1/_2$ × 11 inches), Half Letter ($5^1/_2$ × $8^1/_2$ inches), Executive ($7^1/_4$ × $10^1/_2$ inches), 8 × 13 inches, B6 JIS, $8^1/_2$ × 13 inches, Folio ($8^1/_4$ × 13 inches), 16K (195 × 267 mm), Com10 ($4^1/_8$ × $9^1/_2$ inches), Monarch ($3^7/_8$ × $7^1/_2$ inches), C5 Env (162 × 229 mm), C6 Env (114 × 162 mm), DL Env (110 × 220 mm)

- Custom size

  90 to 216 mm (3.54 to 8.5 inches) in width, 148 to 356 mm (5.83 to 14.0 inches) in length

- Duplex supported paper sizes

  A4, B5 JIS, Legal ($8^1/_2$ × 14 inches), Letter ($8^1/_2$ × 11 inches), Executive ($7^1/_4$ × $10^1/_2$ inches), $8^1/_2$ × 13 inches, Folio ($8^1/_4$ × 13 inches), 8 inches × 13 inches, 16K (195 × 267 mm)

Paper type

Thin Paper

Plain Paper

Middle Thick Paper

Thick Paper 1

Thick Paper 2

Recycled Paper

Color Paper

Preprinted

Prepunched

Letterhead

Bond Paper

Cardstock

Label Paper

Envelope

Paper output capacity (80 g/m^2, 20 lb)

150 sheets

Paper input capacity (80 g/m^2, 20 lb)

- Tray 1

  250 sheets
- Tray 2 (option)

  500 sheets
- Bypass tray

  One sheet

Memory

256 MB

Power requirements

220-240 V, 6 A, 50/60 Hz

Power consumption

- Maximum power consumption

  1300 W or less
- Energy Saver mode 1

  80 W or less
- Energy Saver mode 2

  3.8 W or less

  The power level when the main switch is turned off and the power cord is plugged into an outlet: 1W or less.

  * Recovery time and power consumption may differ depending on the conditions and environment of the machine.

Machine dimensions (Width × Depth × Height)

400 × 469 × 329 mm (15.8 × 18.5 × 13.0 inches) or less

Weight (machine body with consumables)

24 kg (53 lb.) or less

Printer Function Specifications

Printing speed

Black and white: 20 pages per minute (A4), 21 pages per minute (Letter)

Color: 20 pages per minute (A4), 21 pages per minute (Letter)

Resolution

600 × 600 dpi

First print speed

14 seconds or less (A4/Letter, 600 × 600 dpi)

Interface

- Ethernet (10BASE-T, 100BASE-TX)
- Wi-Fi
- USB2.0
- USB2.0 Host

Printer language

PCL6, PCL5c, PostScript3, PictBridge

Fonts

80 fonts

Network protocol

TCP/IP, IPP, Bonjour

Specifications of Options

This section lists the specifications of the various options.

Paper Feed Unit

Paper capacity

500 sheets

Paper size

A4, Letter ($8^1/_2$ × 11 inches)

Dimensions (Width × Depth × Height)

400 × 450 × 127 mm (15.8 × 17.8 × 5 inches)

Paper weight

60 to 105 g/m^2 (16 to 28 lb.)

Weight

Less than 4 kg (8.9 lb.)

Copyright Information about Installed Applications

expat

Copyright (c) 1998, 1999, 2000 Thai Open Source Software Centre, Ltd. and Clark Cooper.

Copyright (c) 2001, 2002 Expat maintainers.

Permission is hereby granted, free of charge, to any person obtaining a copy of this software and associated documentation files (the "Software"), to deal in the Software without restriction, including without limitation the rights to use, copy, modify, merge, publish, distribute, sublicense, and/or sell copies of the Software, and to permit persons to whom the Software is furnished to do so, subject to the following conditions:

The above copyright notice and this permission notice shall be included in all copies or substantial portions of the Software.

THE SOFTWARE IS PROVIDED "AS IS", WITHOUT WARRANTY OF ANY KIND, EXPRESS OR IMPLIED, INCLUDING BUT NOT LIMITED TO THE WARRANTIES OF MERCHANTABILITY, FITNESS FOR A PARTICULAR PURPOSE AND NONINFRINGEMENT. IN NO EVENT SHALL THE AUTHORS OR COPYRIGHT HOLDERS BE LIABLE FOR ANY CLAIM, DAMAGES OR OTHER LIABILITY, WHETHER IN AN ACTION OF CONTRACT, TORT OR OTHERWISE, ARISING FROM, OUT OF OR IN CONNECTION WITH THE SOFTWARE OR THE USE OR OTHER DEALINGS IN THE SOFTWARE.

Iperf

Copyright (c) The Board of Trustees of the University of Illinois

All Rights Reserved.

Iperf performance test

Mark Gates

Ajay Tirumala

Jim Ferguson

Jon Dugan

Feng Qin

Kevin Gibbs

John Estabrook

National Laboratory for Applied Network Research

National Center for Supercomputing Applications

University of Illinois at Urbana-Champaign

http://www.ncsa.uiuc.edu

Permission is hereby granted, free of charge, to any person obtaining a copy of this software (Iperf) and associated documentation files (the "Software"), to deal in the Software without restriction, including without limitation the rights to use, copy, modify, merge, publish, distribute, sublicense, and/or sell copies of the Software, and to permit persons to whom the Software is furnished to do so, subject to the following conditions:

- Redistributions of source code must retain the above copyright notice, this list of conditions and the following disclaimers.
- Redistributions in binary form must reproduce the above copyright notice, this list of conditions and the following disclaimers in the documentation and/or other materials provided with the distribution.
- Neither the names of the University of Illinois, NCSA, nor the names of its contributors may be used to endorse or promote products derived from this Software without specific prior written permission.

THE SOFTWARE IS PROVIDED "AS IS", WITHOUT WARRANTY OF ANY KIND, EXPRESS OR IMPLIED, INCLUDING BUT NOT LIMITED TO THE WARRANTIES OF MERCHANTABILITY, FITNESS FOR A PARTICULAR PURPOSE AND NONINFRINGEMENT. IN NO EVENT SHALL THE CONTIBUTORS OR COPYRIGHT HOLDERS BE LIABLE FOR ANY CLAIM, DAMAGES OR OTHER LIABILITY, WHETHER IN AN ACTION OF CONTRACT, TORT OR OTHERWISE, ARISING FROM, OUT OF OR IN CONNECTION WITH THE SOFTWARE OR THE USE OR OTHER DEALINGS IN THE SOFTWARE.

WPA Supplicant

Copyright (c) 2003-2011, Jouni Malinen <j@w1.fi> and contributors All Rights Reserved.

Redistribution and use in source and binary forms, with or without modification, are permitted provided that the following conditions are met:

1. Redistributions of source code must retain the above copyright notice, this list of conditions and the following disclaimer.

2. Redistributions in binary form must reproduce the above copyright notice, this list of conditions and the following disclaimer in the documentation and /or other materials provided with the distribution.

3. Neither the name (s) of the above-listed copyright holder (s) nor the names of its contributors may be used to endorse or promote products derived from this software without specific prior written permission.

THIS SOFTWARE IS PROVIDED BY THE COPYRIGHT HOLDERS AND CONTRIBUTORS "AS IS" AND ANY EXPRESS OR IMPLIED WARRANTIES, INCLUDING, BUT NOT LIMITED TO, THE IMPLIED WARRANTIES OF MERCHANTABILITY AND FITNESS FOR A PARTICULAR PURPOSE ARE DISCLAIMED. IN NO EVENT SHALL THE COPYRIGHT OWNER OR CONTRIBUTORS BE LIABLE FOR ANY DIRECT, INDIRECT, INCIDENTAL, SPECIAL, EXEMPLARY, OR CONSEQUENTIAL DAMAGES (INCLUDING, BUT NOT LIMITED TO, PROCUREMENT OF SUBSTITUTE GOODS OR SERVICES;

LOSS OF USE, DATA, OR PROFITS; OR BUSINESS INTERRUPTION) HOWEVER CAUSED AND ON ANY THEORY OF LIABILITY, WHETHER IN CONTRACT, STRICT LIABILITY, OR TORT (INCLUDING NEGLIGENCE OR OTHERWISE) ARISING IN ANY WAY OUT OF THE USE OF THIS SOFTWARE, EVEN IF ADVISED OF THE POSSIBILITY OF SUCH DAMAGE.

Trademarks

Bonjour, Mac OS, and Safari are trademarks of Apple Inc., registered in the U.S. and other countries.

Firefox is a registered trademark of the Mozilla Foundation.

Java is a registered trademark of Oracle and/or its affiliates.

LINUX is the registered trademark of Linus Torvalds in the U.S. and other countries.

Microsoft, Windows, Windows Server, Windows Vista, and Internet Explorer are either registered trademarks or trademarks of Microsoft Corporation in the United States and/or other countries.

PCL is a registered trademark of Hewlett-Packard Company.

PostScript is a registered trademark or trademark of Adobe Systems Incorporated in the United States and/or other countries.

Red Hat is a registered trademark of Red Hat, Inc.

Other product names used herein are for identification purposes only and might be trademarks of their respective companies. We disclaim any and all rights to those marks.

PictBridge is a trademark.

The proper names of Internet Explorer 6, 7, 8, 9, 10 and 11 are as follows:

Microsoft® Internet Explorer® 6

Windows® Internet Explorer® 7

Windows® Internet Explorer® 8

Windows® Internet Explorer® 9

Internet Explorer® 10

Internet Explorer® 11

The proper names of the Windows operating systems are as follows:

- The product names of Windows Vista are as follows:

  Microsoft® Windows Vista® Ultimate

  Microsoft® Windows Vista® Business

  Microsoft® Windows Vista® Home Premium

  Microsoft® Windows Vista® Home Basic

  Microsoft® Windows Vista® Enterprise

- The product names of Windows 7 are as follows:

  Microsoft® Windows® 7 Starter

  Microsoft® Windows® 7 Home Premium

  Microsoft® Windows® 7 Professional

  Microsoft® Windows® 7 Ultimate

Microsoft® Windows® 7 Enterprise

- The product names of Windows 8 are as follows:

  Microsoft® Windows® 8

  Microsoft® Windows® 8 Pro

  Microsoft® Windows® 8 Enterprise

- The product names of Windows 8.1 are as follows:

  Microsoft® Windows® 8.1

  Microsoft® Windows® 8.1 Pro

  Microsoft® Windows® 8.1 Enterprise

- The product names of Windows Server 2003 are as follows:

  Microsoft® Windows Server® 2003 Standard Edition

  Microsoft® Windows Server® 2003 Enterprise Edition

  Microsoft® Windows Server® 2003 Web Edition

  Microsoft® Windows Server® 2003 Datacenter Edition

- The product names of Windows Server 2003 R2 are as follows:

  Microsoft® Windows Server® 2003 R2 Standard Edition

  Microsoft® Windows Server® 2003 R2 Enterprise Edition

  Microsoft® Windows Server® 2003 R2 Datacenter Edition

- The product names of Windows Server 2008 are as follows:

  Microsoft® Windows Server® 2008 Foundation

  Microsoft® Windows Server® 2008 Standard

  Microsoft® Windows Server® 2008 Enterprise

  Microsoft® Windows Server® 2008 Datacenter

  Microsoft® Windows Server® 2008 for Itanium-based Systems

  Microsoft® Windows® Web Server 2008

  Microsoft® Windows® HPC Server 2008

- The product names of Windows Server 2008 R2 are as follows:

  Microsoft® Windows Server® 2008 R2 Foundation

  Microsoft® Windows Server® 2008 R2 Standard

  Microsoft® Windows Server® 2008 R2 Enterprise

  Microsoft® Windows Server® 2008 R2 Datacenter

  Microsoft® Windows Server® 2008 R2 for Itanium-based Systems

  Microsoft® Windows® Web Server R2 2008

Microsoft® Windows® HPC Server R2 2008

- The product names of Windows Server 2012 are as follows:

  Microsoft® Windows Server® 2012 Foundation

  Microsoft® Windows Server® 2012 Essentials

  Microsoft® Windows Server® 2012 Standard

  Microsoft® Windows Server® 2012 Datacenter

- The product names of Windows Server 2012 R2 are as follows:

  Microsoft® Windows Server® 2012 R2 Foundation

  Microsoft® Windows Server® 2012 R2 Essentials

  Microsoft® Windows Server® 2012 R2 Standard

INDEX

A

Administrator password....7, 118
Administrator settings....91, 118
Attaching Paper Feed Unit....18
Authentication....172
Auto e-mail notification settings....108

B

B&W print priority....103
Backup settings....118
Basic operation....59
Bond paper....38
Bypass tray....52, 100
Bypass tray setting priority....100

C

Cardstock....38
Cleaning....133, 134, 136, 139
Color paper....38
Community....109
Confidential document....62
Configuration page....117
Consumables....181
Control panel....13
Copyright information....187
Counter information....97

D

Default settings....118
DHCP....22, 24
Digital camera....66
Direct printing....66
Disclaimer....6
DNS setting....107
Duplex....99

E

E-mail notification 1....108
E-mail notification 2....108
Economy Color Prints....98
Encryption....172
Encryption key exchange....173, 174
Energy saver mode....120
Envelope....38, 53
Error messages....167
expat....187
Extending tray 1....50
Exterior....9

F

Fusing Unit....132

G

General status....105

I

I/O timeout....103
IKE settings....113
Installing the machine....15
Interior....12
Intermediate transfer unit....132
Introduction....6
Iperf....187
IPsec global settings....113
IPsec policy settings....113
IPsec settings....113
IPsec transmission....172
IPv6 configuration....106
IPv6 environment....171

J

Job cancel....59

L

Label paper....38
Language....95
Legal prohibition....6
Letterhead....38
Lists....82, 117
Loading paper....48
Locked Print....62, 63, 64

M

Machine information....99
Maintenance page....117
Manual IP address....23, 25
mDNS setting....106
Menu chart....74
Middle Thick paper....38

Moving....179

N

Network application....106
Network print setting....106
Network settings....22, 87, 105
Network status....105
Non-recommended paper....45
Notes....178

O

Operation tools....21
Options....186

P

Page counter....97
Paper Feed Unit....18, 186
Paper jam....143, 144, 146, 148
Paper mismatch....61
Paper size....55
Paper tray....96
Paper type....38, 55
PictBridge....66, 67, 68
Plain paper....38
POP3 settings....110
Preprinted paper....38
Prepunched paper....38
Print area....46
Print cartridge....121, 181
Print counter....97
Print functions....70
Print output functions....71
Print quality functions....70
Printer features....83
Printer function....185
Priority tray....101

R

Recycled paper....38
Replacing the Fusing Unit and Transfer Rollor..132
Replacing the intermediate transfer unit....132
Reports....82, 117
Reset settings....118
Restore settings....119
Restrict user function....30, 33, 104

S

SA (Security Association)....173
SMTP settings....110
SNMP settings....109
Specifications....183, 185
Status information....96
Status messages....167
Supported paper....35
System....109
System information....96
System settings....75, 100

T

TCP/IP status....105
Thick paper 1....38
Thick paper 2....38
Thin paper....38
Toner....96, 121, 178
Top page....94
Trademarks....190
Transfer Rollor....132
Trap....109
Tray 1....48
Tray 1 priority....101
Tray 2....48, 100
Tray paper settings....79, 100
Troubleshooting....68, 150, 152, 155, 158, 167

U

User code....33
User restriction....7

W

Waste toner bottle....126
Web Image Monitor....93
Where to put the machine....15
Wireless LAN settings....111
Wireless LAN setup....27
Wireless settings....111
WPA Supplicant....188

MEMO

MEMO

Lenovo (Beijing) Limited
Address: No.6 Chuang Ye Road Shangdi Information Industry Base,
Haidian District, Beijing, China
Post Code: 100085
Website: www.lenovo.com
Version: 1.0

Copyright © (2015) Lenovo (Beijing) Limited and its Licensors. All rights reserved

EN CN M274-8601